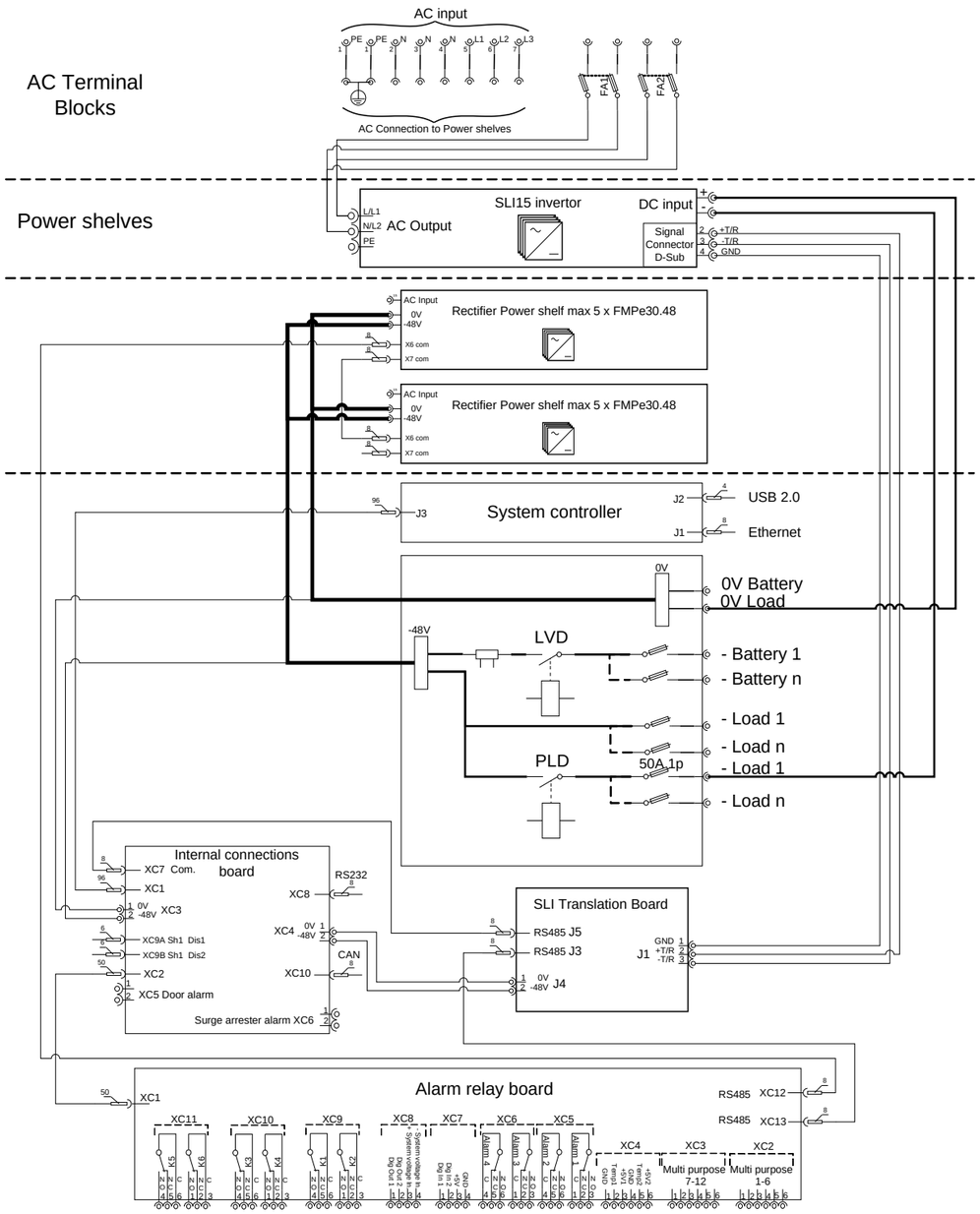

Technical Support

For technical support please visit:
http://www.unipowerco.com/contact

Contact Telephone numbers are:

North America:	+1-954-346-2442
Latin America:	+1-954-905-1078
Europe:	+44-1903-768200

If you find errors or problems with this documentation, please notify UNIPOWER. UNIPOWER does not guarantee that this document is error-free. The information in this document is subject to change without notice.

Document Number: BCG.00134.0 Revision: B

sli15-qig-revB-1116.indd

SLI 15 Inverter Installation to the Power Supply System - Quick Install Guide

START HERE

This Quick Install Guide includes basic steps for installation of the SLI 15 Inverter into Guardian Power Supply Systems (1-M00024G*700037 and YSS.00163).

Disclaimer

UNIPOWER is not responsible for system problems that are the result of incorrect installation or modification of the instructions provided in this guide.

WARNING!

There are potential hazards related to the installation of this system. It is recommended to carefully read and understand the contents of the System Safety Chapter before performing this installation.

WARNING!

There are potential hazards related to this installation.
It is strongly recommended to TURN OFF the Power System before performing this installation.

SLI 15 Connection Kit

No.	Description	Item
1	Translation Board	YTM.00007
2	Signal Cable for SLI 15	ZLH.00673
3	DC Input Cable	ZLH.00206
4	AC Output Cable	ZLH.00627
5	Grounding Cable	1-155020-G
6	RJ45 Patch Cable	1-120807-G
7	Supply Cable	ZLH.00756
8	Plastic Cover	833C3162002-G
9	Plastic Insulation	833C3188000
10	Screw 4.2 x 9.5mm	1-114816-G
11	Polarity Labels	8153A27E010
12	M6 Screw	1-101656-G

1 SLI 15 Overview

The SLI 15 Inverter is designed for 19 inch rack mounting. Prior to mounting the SLI Inverter into the cabinet perform all connections according to this guide.

Figure - 1 - Side & Front View (Dimensions)

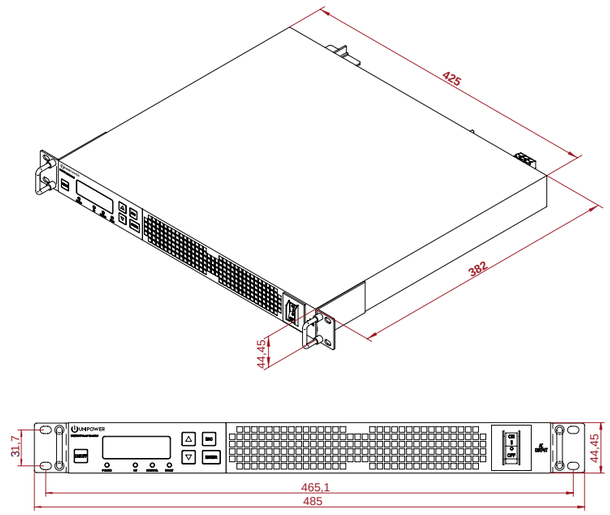

Figure - 2 - Rear View Connections

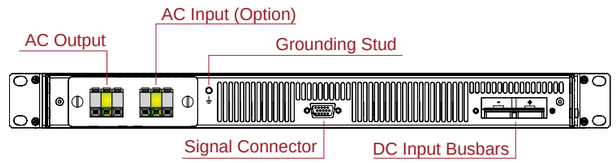

2 SLI Bracket Adjustment

Remove the SLI Brackets loosening four screws on each side.

Figure - 3 - SLI Bracket Removal

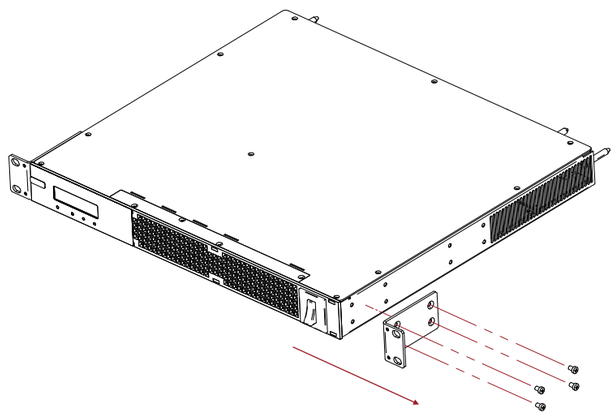

Attach the Brackets back to the SLI according to the requirements of the system.

*Figure - 4 - M24*700037*

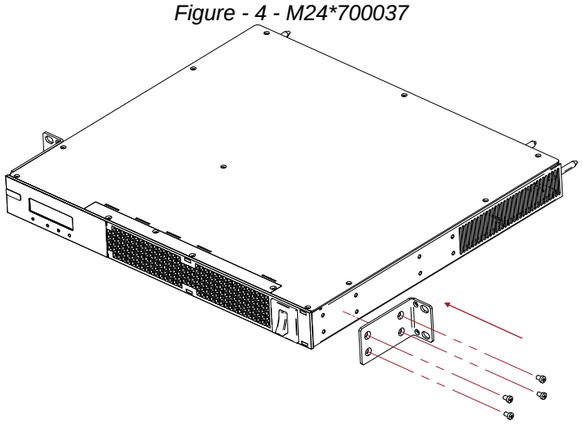

Figure - 5 - YSS.00163

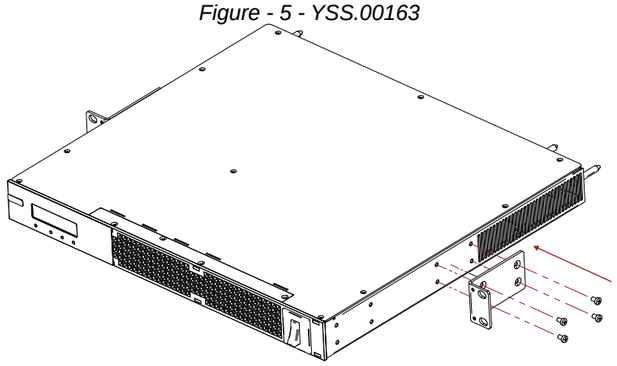

3 Grouding Connection

WARNING
Prior to installation to the system the SLI 15 must be properly grounded.

Connect the Grounding cable to the Grounding stud on the rear side of SLI Inverter (cable lug M5). Route the cable to the grounding terminal of corresponding cabinet, see Figures 6 & 7.

*Figure - 6 - Top Right Side of the Cabinet M24*700037*

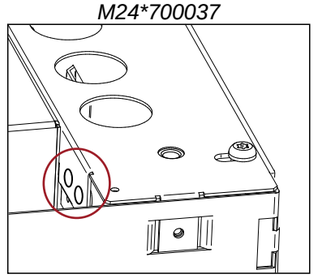

Figure - 7 - Bottom Right Side of Cabinet YSS.00163

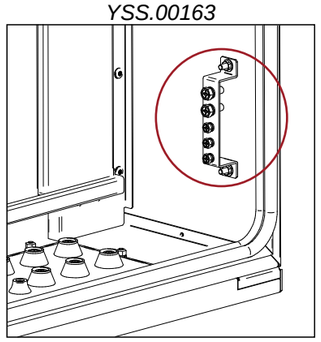

4 DC Input Connection

Untighten two screws and remove existing plastic insulation from DC busbars. Attach the new plastic insulation (9) and tighten with original screws.

Connect the Negative (blue) and the Positive (black) cables (3) to the SLI DC Input busbar (Figure 2) using M6 screws. Route the cables to DC Distribution and connect the Negative (blue) cable to 50A Breaker and Positive (black) to 0V Busbar.

NOTE
For correct selection of breakers, see Distribution layout in Appendix A of Instruction Manual.

Attach the plastic cover (8), used for insulating the DC Input, to the DC Input Busbar (A), close (B) and tighten with screw (10) (C). Stick the polarity labels (11) on the plastic cover and insulation (9).

Figure - 8

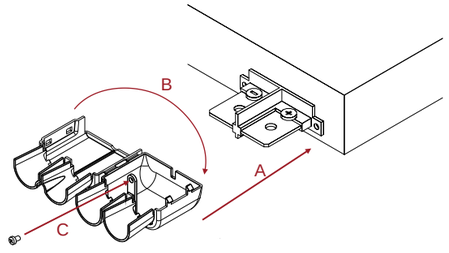

5 Communication Interface

NOTE
All connections must be performed according to Schematic diagram on page 4 of this Quick Install Guide.

1. Install the SLI Translation Board (1) onto the DIN rail next to the AC Mains Terminal Block (rear wall of cabinet M24*700037 or rear side of PBDU - YSS.00163). See Figure 9.
2. Connect the Signal Cable (2) to the Signal Connector (type D-sub) on the rear side of the SLI and tighten with two screws M2.5.
3. Connect the other end of the Signal Cable to the SLI Translation Board (J1) (2).
4. Connect the 48V supply cable (7) from the Internal Connection Board (XC4) to the SLI Translation Board (J4).
5. Disconnect the RS485 communication cable from the Internal connection board (XC7) and connect it to the SLI Translation Board (J5). Connect RS485 communication cable to SLI Translation Board (J3) and the other end to Internal connection board (XC7).

WARNING
The SLI Translation Board must be supplied with system voltage (48V) otherwise the power source for the RS485 might be damaged.

6 AC Output Connection

Connect the output cable (4) from the SLI AC Output terminals to the AC Load Breaker (FA1 and FA2) situated on the AC Mains Input Terminal Block (Figure 9).

Figure - 9

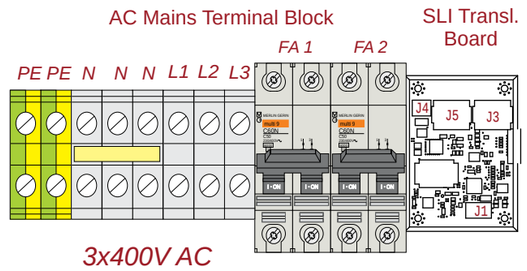

7 SLI Mounting to the Cabinet

Mount the SLI unit into the cabinet and tighten with four M6 screws (12).

*Figure - 10 - M24*700037 shown*

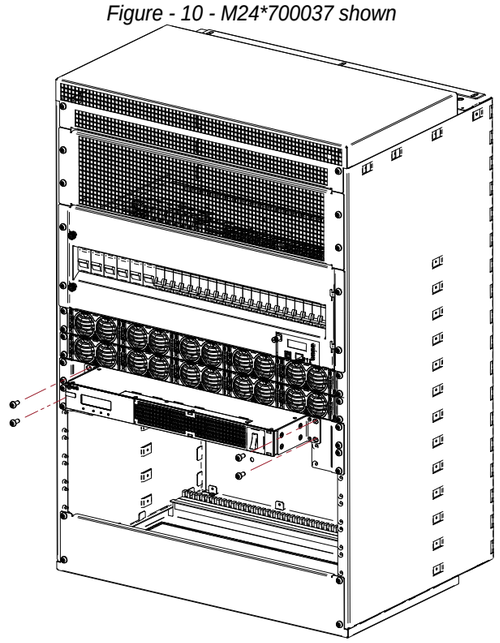

8 SLI Commissioning

NOTE
It is highly recommended to read thought the SLI 15 Series User Guide for correct SLI unit settings.

NOTE
Make sure all connections are made according to the Schematic diagram on page 4.

1. Switch ON the Power System and the SLI unit (Battery breaker, AC Input Breaker, SLI Input breaker on the PBDU and also the SLI front panel switch).
2. Check the output parameter settings on the SLI panel.
3. Verify the output voltage on the AC Load breaker.
4. Switch ON the FA4 breaker and connect the load.
5. Connect the PC to the control unit via the PowCom™ software and verify the SLI reading (voltage, current, power and alarms). The SLI data can be verified via SNMP or directly on the ACC Extended (ACX) Controller front panel.