USER GUIDE
SLI 15 INVERTER

www.unipowerco.com

Manual No. SLI-15-G-3a
sli15-userguide-rev3a-0718.indd

© 2018 UNIPOWER LLC
All Rights Reserved

UNIPOWER LLC · 3900 Coral Ridge Drive, Coral Springs, Florida 33065, USA · sales@unipowerco.com
North America: +1 954-346-2442 · Europe: +44 1903 768200

CONTENTS

1 The Display 3
2 Startup Sequence and Standby Status 4
3 Operating Modes 5
4 Controller Status 5
5 Main Menus 6
6 Setting Menus 6
7 Status Menu 15
8 Info Menu 16

Appendix A - Service Menu 17
Appendix B - Factory Settings 19

1 The Display

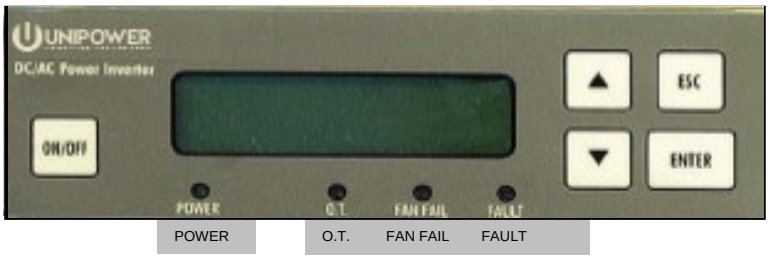

Function of keys

<UP> / <DOWN> keys
Use to scroll through menus

<UP> key

<DOWN> key

<ESC> key
Use to exit from the current menu

<ENTER> key
Use to confirm a selection or value

<ON/OFF> key
Use to turn ON or Stand-by (OFF) the unit.

LEDs for operating status

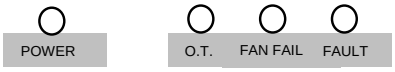

Four front-panel LED's show inverter status

"POWER" (green)
- The "POWER" LED is lighted on as soon as the unit starts supplying power to the load
- It indicates normal operation.

"O.T." (red)
- When lighted on it indicates that the internal temperature is approaching the thermal shutdown threshold. In addition to the visual indication, the unit sounds audibly.

"O.T." and "FAULT" (red)
- The thermal shutdown threshold has been exceeded.
  Note: The thresholds are factory set and not changeable (see "Factory Settings" on "Appendix B").

"FAN FAIL" (red)
- The "FAN FAIL" LED is lighted on when the speed of one of the fan falls below its nominal value.

"FAULT" and "FAN FAIL"
- They are lighted up at the same time if more than one fan has stopped *or* a general malfunction is detected. The unit continues to works until an OT is detected.

"FAULT" (red)
- "FAULT" LED is lighted on when a general failure happens. (for general fault conditions see table below)

GENERAL FAILURE CONDITIONS
- Failure of at least 2 fans
- Over Temperature
- Output Over Current (the protective output breaker on front panel, trips and a "Breaker OFF" state is indicated on the display.)
- Output Over Voltage
- Output Under Voltage
- Dc input voltage out of range (UV or OV)
- DC Input Over Current

2 Startup sequence and the Standby Status

The STAND BY status shows the DC source is connected; loads are disconnected by two internal relays.

As soon as the DC input voltage is applied, "STANDBY…" is displayed.

Three operations are possible (see Fig.1):

(a) Press <ESC> to enter into the SETTINGS menu's first page, or

(b) Press <ENTER> to visualize the configuration mode of the unit. Two screens are presented automatically within a few seconds. The first **(1)** shows the mode of the unit (Stand Alone or Parallel mode). In case of Parallel mode the screen tells whether the unit is master or slave. In case of Stand Alone mode the units is always a master The second screen **(2)** shows if the unit has the optional Static Transfer Switch.
Pressing the "ESC" key shows the SETTINGS menu's first page, or

(c) Press <ON/OFF> to power up the unit. The display shows "STARTING…" and the screen **(3)** appears automatically after a few seconds. Using <UP> / <DOWN> keys it is possible to scroll six screens on the display and visualize the electrical parameters (Vout/Iout, Vout/Freq, Iout/Pout,…). Pressing <ENTER> the screen **(1)** is visualized for short time, then the display goes back to the previous screen automatically.
Pressing <ESC> the SETTINGS menu is displayed.

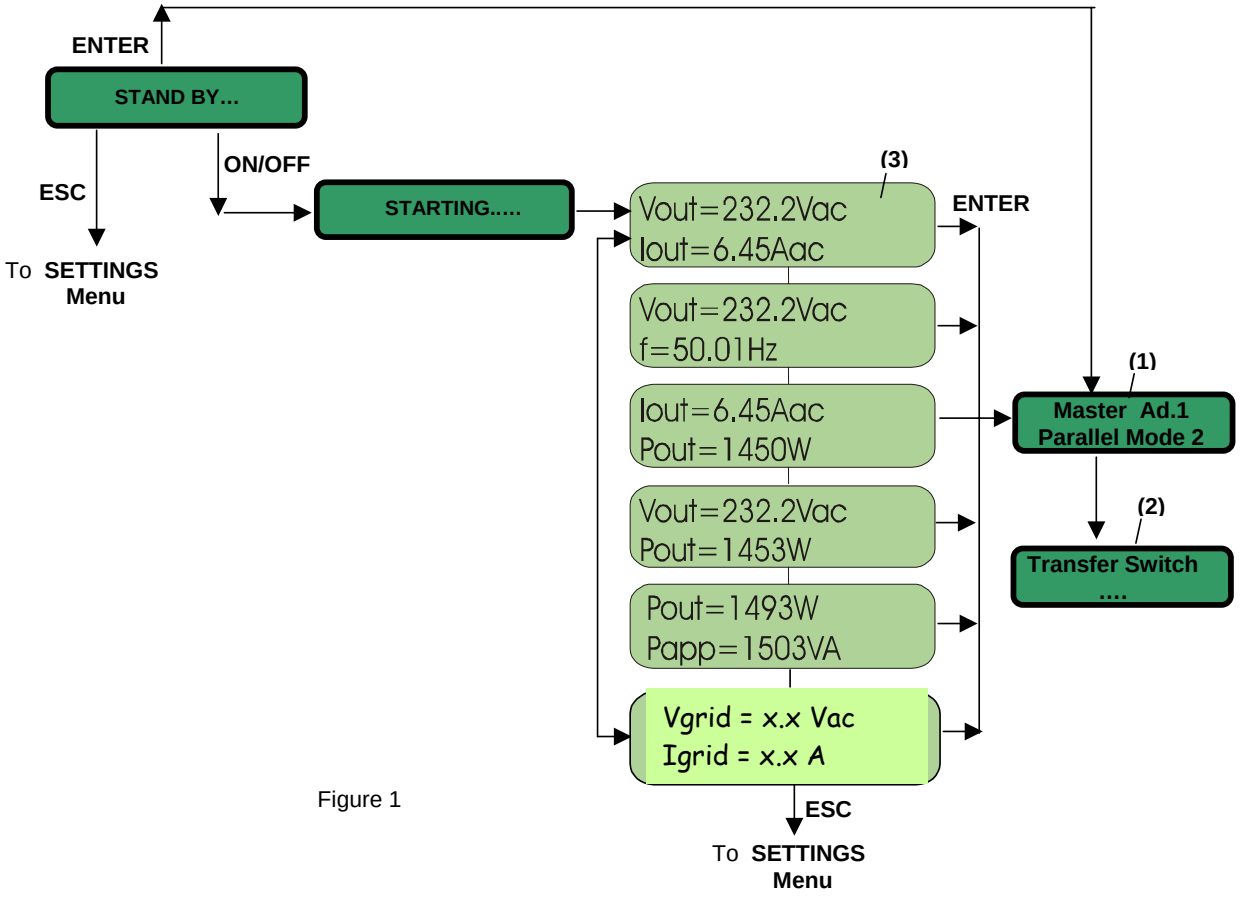

Figure 1

3 Operating modes

The unit has two operating modes:

- Stand Alone mode: there is only one inverter in the system
- Parallel mode: there are several inverters working in parallel (max. number of parallelable units: 8)

The default mode is Stand-Alone.

Trained personnel should set the operating mode before the system starts supplying the load (see SERVICE menu on "Appendix A").

It is possible but not recommended to change the operating mode while the inverter is operating.

ATTENTION: incorrect unit setting may lead the system to latch up

Notes

- When the unit work in Parallel mode it is not possible to change the following parameters in the SETTINGS menu: Vout, Iout, Frequency. The access to these parameters is locked to avoid system conflicts (see also Notes on page 8).

4 Controller status

When operating in Parallel mode the controller inside each unit can operate in two modes:

- Master: provides the commands for the whole system of paralleled inverters. There is only one master.
- Slave: it follows the commands of the Master

When working in Stand Alone mode the status of the unit is Master.

Controller statuses are assigned automatically and cannot be changed by the user. In case of failure of the master in a parallel configuration a new master is selected automatically and control of the system of paralleled inverters is transferred automatically to the new master.

5 Main menus

There are 3 main Menus (Fig.2):
- The **SETTINGS** menu
- The **STATUS** menu
- The **INFO** menu

6 The SETTINGS menu

6.1 Overview

Through this menu it is possible to set several parameters of the unit. To avoid problems make sure you know how the parameters will affect the load.
To access the SETTINGS menu contents a 1ST level password must be provided.
For increased protection certain sensitive parameters are protectyed by a 2ND level password that an Authorized operator must provide.

Settings changeable by Generic operator (1ST level password)
- Unit Serial Port Address, V_{out}, I_{limit}, Frequency.
- Protections (AutoRestart or Latched types)
- Display Light (ON/OFF), Time Display Light ON and Key Click
- Autostart, Remote ON/OFF
- New Password 1ST level only

Settings changeable by Authorized operator (2ND level password)
These settings are accessible via the SERVICE submenu whose access is protected by the 2ND level password.
- Operating mode, 2ND levelPassword, Restore data, Utility menu, System Time-out.

These settings are contained in the UTILITY submenu contained in the SERVICE submenu (no password needed to access UTILITY from SERVICE, see Fig.2 and also Appendix A).
- Change the Led Status (ON/OFF)
- Set the Buzzer (ON/OFF)
- Set the Fans (ON/OFF) and the Fan Speed
- Read fan Speed, System Temperature, Internal Temperature and Ambient Temperature

NOTE:
- **The SERVICE submenu should be accessed by trained personnel only. An error in these settings could seriously damage the system.**
- **To avoid potential conflicts during the operating procedures, it is preferable to keep the unit in STANDBY status before accessing and acting on the SERVICE submenu.**

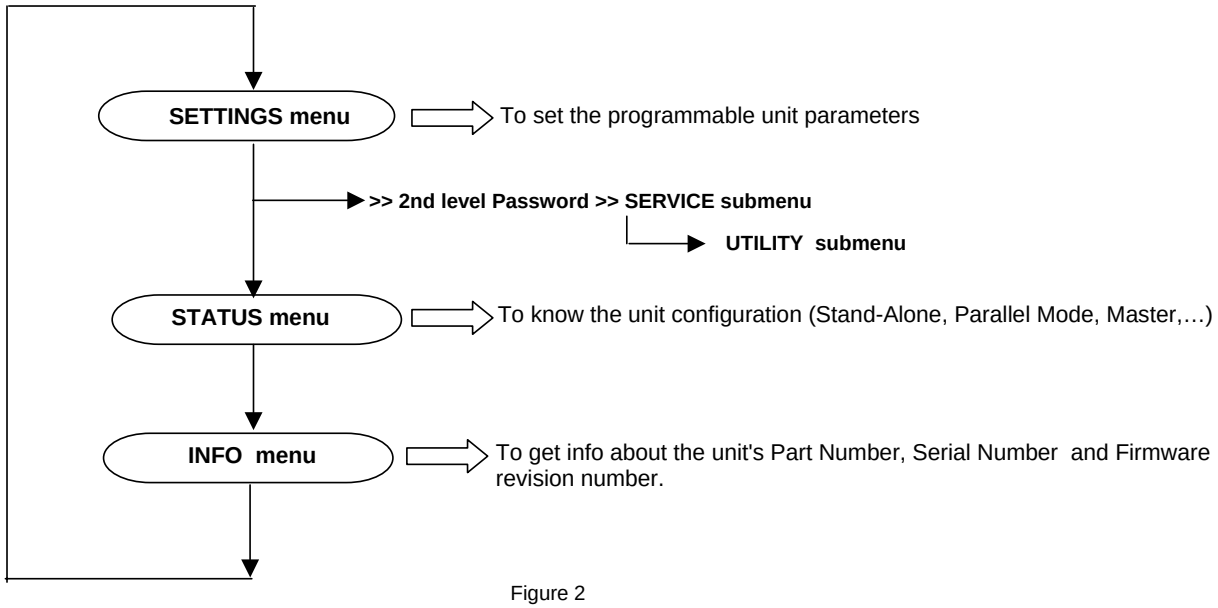

Figure 2

6.2 Navigating the SETTINGS menu

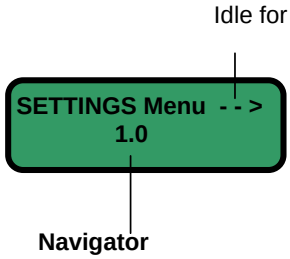

Navigator
Gives the current position on the menu and sub menu map

X.0 **:** shows the main menu start page.
X = 1 for SETTINGS menu
X = 2 for STATUS menu
X = 3 for INFO menu.

X**.1** or X**.2** or X**.3** etc.
numbers coming after the point indicate any 1ST level submenu items
X.1**.1** or X.1**.2** or X.1**.3** etc.
numbers coming after the second point, mark any 2ND level submenu items

Example:

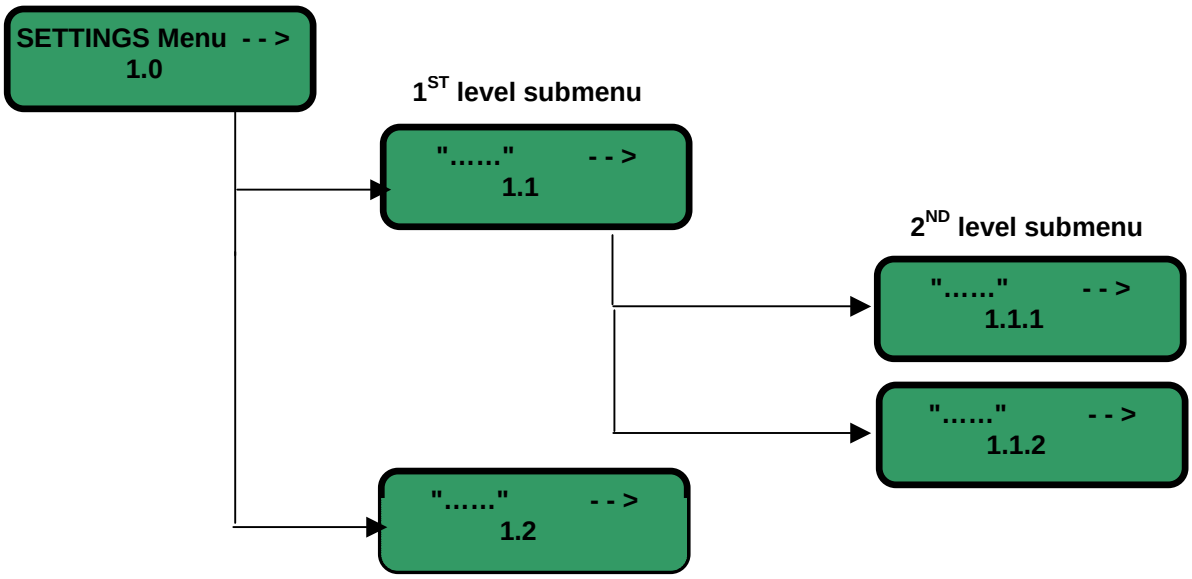

Figure 3

6.3 Structure of the SETTINGS menu

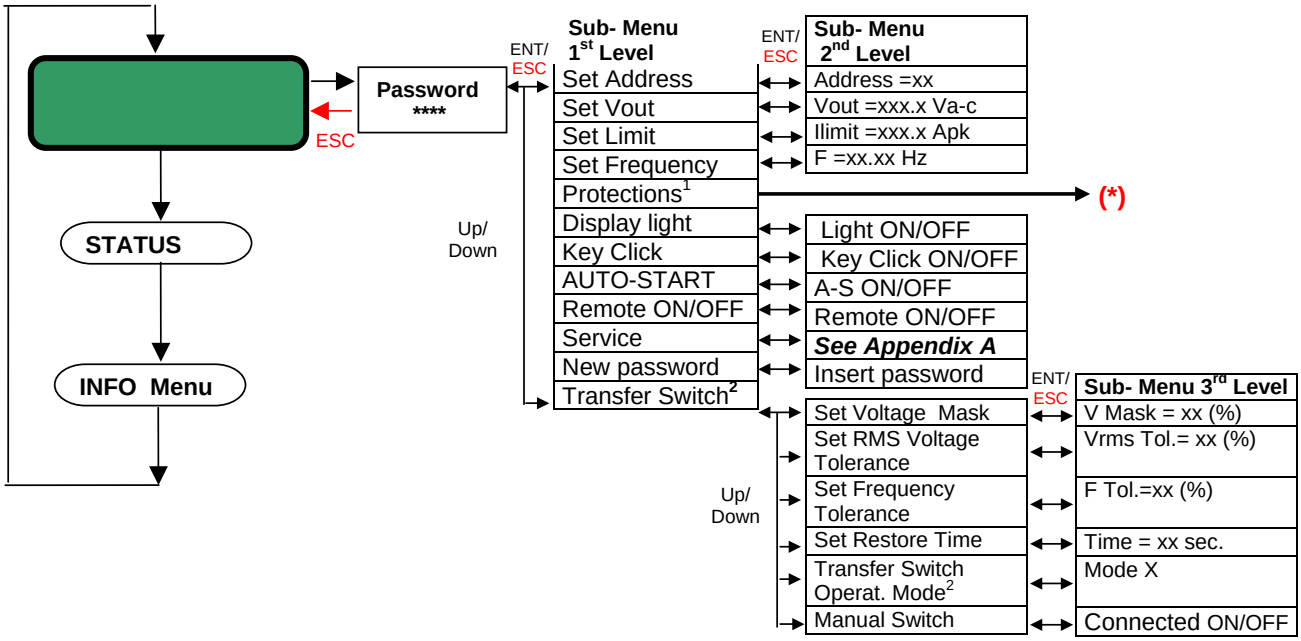

Figure 4

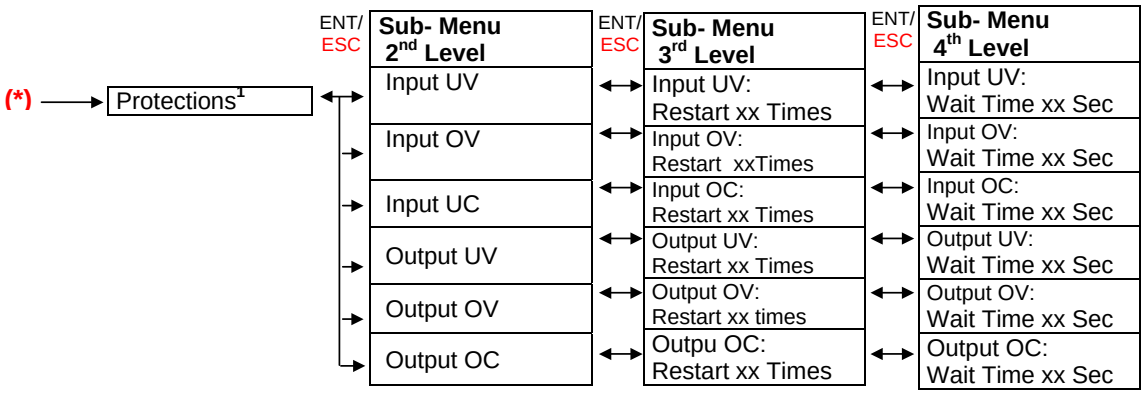

Figure 4.1

[1] For the Protections operating procedure, please see page 12.

[2] For the Tranfer Switch operating procedure, please see page 13.

6.4 SETTINGS menu: access and submenus

You can access the SETTINGS menu starting from the STAND BY… status just by pressing the <ESC> key or, alternatively, the <ENTER> key: see Fig.1 on page 3.
The access is protected by the 1ST level password. The default password is “0000”. To insert the "0" character press the <ENTER> key on front panel.
With the <UP> and <DOWN> keys you can scroll all the sub-menus listed in Fig.4. Use <ENTER> to select one of them.

The sequence of the 1ST level submenus with the setting parameters is described below (PROTECTIONS and SERVICE submenus are addressed on the following pages).

Use <UP> and <DOWN> keys to set the "xx" parameters at the desired value. Then press <ENTER> to confirm.

SET Address

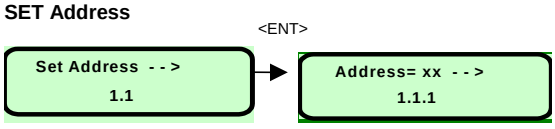

- To set the serial port address (Address = "xx").
- The address must be set only when the serial communication in parallel configuration is used. Otherwise you can leave the default value.
- Available address range: from 1 to 32
- Default address: 1

SET Vout

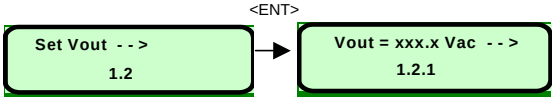

- To set the Vout value as follows:
  230Vac models: from 200Vac to 240V ac with 0.1V resolution
  115Vac models: from 100Vac to 121 V ac with 0.1V resolution
- Factory setting:
  230Vac models: 230Vac
  115Vac models: 115Vac

SET Ilimit

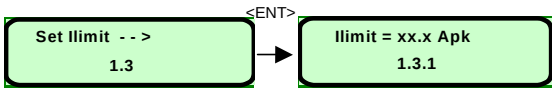

- To set the maximum current delivered by the unit
- Setting range:
  230Vac models: 1Apk to 8Apk with 0.1A resolution
  115Vac models: 0Apk to 14Apk with 0.1A resolution
- Factory setting:
  230Vac models: 8 Apk
  115Vac models: 14 Apk

SET Frequency

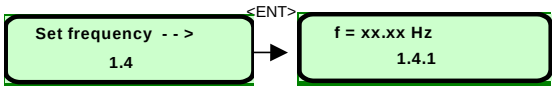

- Setting range: 47Hz to 63Hz
- Factory setting:
  230Vac models: 50Hz
  115Vac models: 60Hz

Set Backlight Time lenght

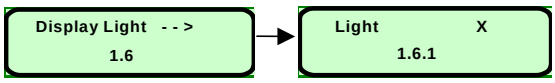

- The back light time lenght can be set from 2 to 60 sec.
- Factory setting: 20sec.

Set Key Click ON/OFF

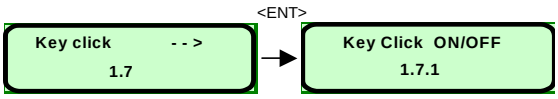

- To enable the audible "click" when a key is pressed
- Factory setting: "Click ON"

Set Autostart Mode

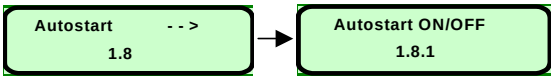

- Auto-Start ON ⇒ the unit starts up as soon as the DC input source connection is made. In this case there is no need to press the <ON/OFF> key on front panel.
- Auto-Start OFF⇒ The unit starts up only after <ON/OFF> key has been pressed.
- Factory setting: Auto-Start OFF

Set Remote ON/OFF

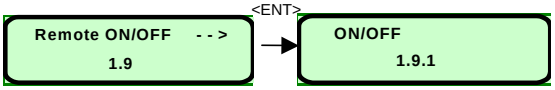

- Remote ON ⇒ It is possible to turn ON /OFF the unit remotely provided that a switch or relay is connected between pins 6 and 7 of the signal connector on the back side of the unit. Refer to the Installation Manual".
- Factory Setting: Remote "OFF"

Set New Password

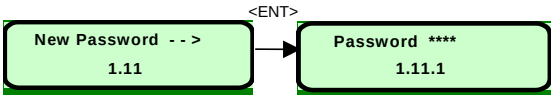

- This option allows to change the current password. To set the new password digits use the <UP> and <DOWN> keys.
- Max. Password length: 4
- Factory setting: "0000"

NOTES

The following settings are not accessible when the current configuration unit mode is the **Parallel mode.** That is to avoid conflicts within the system. Set Vout , Set I_{LIMIT}, Set Frequency, Set Remote ON/OFF.

If the user wants to make changes when operating in Parallel mode, he unit must first of all set to Stand-Alone mode using the following procedure (to be repeated for each unit working in parallel):

1. Set the unit to Stand-alone mode:
   - on the SETTINGS menu select the SERVICE submenu. Press <Enter> to confirm the choice.
   - Insert the 2nd level password (default password is “1111”; use the <UP> and <DOWN> keys to select the digits. Press <Enter> to confirm.
   - Select the OPERATING MODE submenu and press <Enter>.
   - Change "Mode = 2"(parallel mode) into "Mode =0"(stand-alone mode). Use the <UP> key to insert the character "0".
2. Change the Vout, I_{LIMIT}, Frequency and Remote ON/OFF settings like explained before.
3. After the changes are done restore the parallel mode with the same procedure described in step 1.

It is strongly recommended to set all units with identical Vout, I_{LIMIT}, Frequency and Remote ON/OFF values when working in parallel.

6.5 SETTINGS menu: the PROTECTIONS submenu

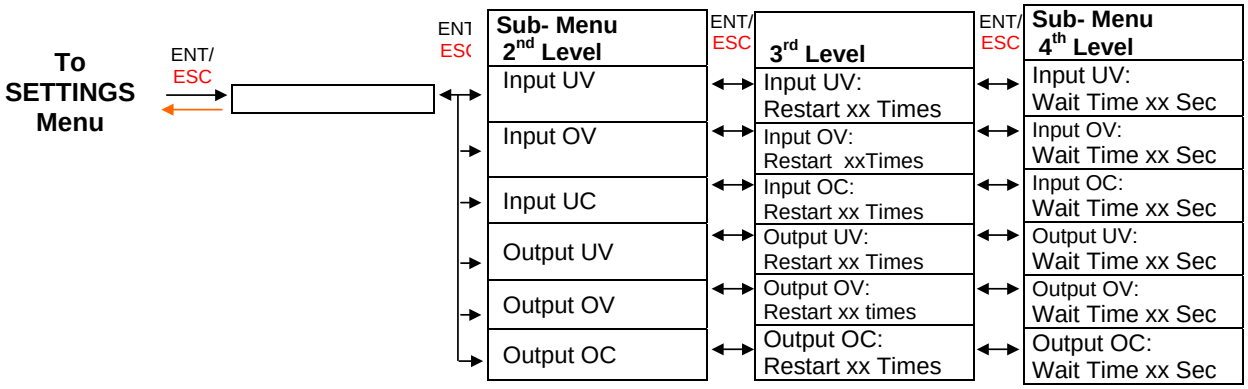

Figure 5

Each type of protection listed on the table in Fig.5 (Input UV, Input OV, Input UC, Output UV, Output OV, Output OC) , can be customized from the front panel.

After selecting an item listed in the PROTECTIONS submenu (Fig. 5) it is possible to choose between two types of protection mode: "Restart mode" or "Latch up mode".

Restart mode
The unit tries to restart a certain numbers ("xx") of times, after which the unit latches up.

Set "xx" from 1 to 10 using <UP> and <DOWN> keys. Press <Enter> to confirm. Factory setting = 5 times.

Set "xx" >10 and press the <ENTER> to have the unit continuously try to restart.

Latch up mode

6.6 SETTINGS menu: the TRANSFER SWITCH submenu

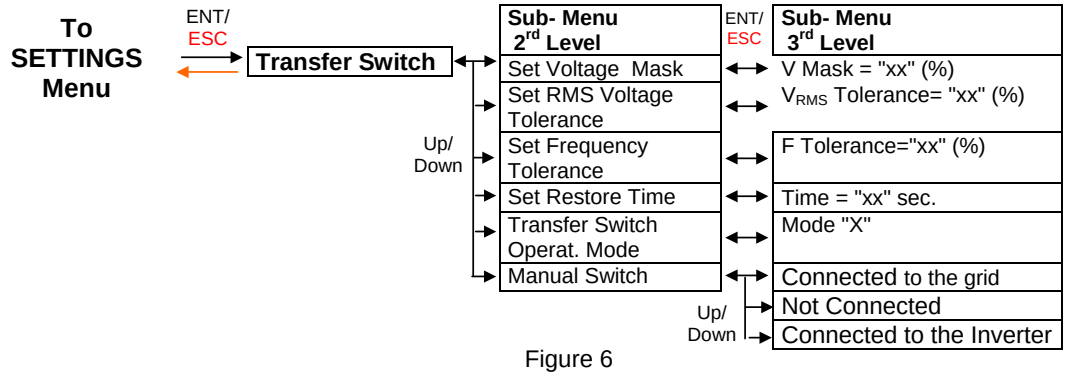

Figure 6

With the TRANSFER SWITCH submenu you can set the Static-Transfer Switch (STS) operation mode for and define the tolerance of electrical parameters such as voltage and frequency for the operation with the STS.

Use <UP> and <Down> keys to set the "xx" parameters at the desired value. To confirm: press <ENTER> .

SET Voltage Mask

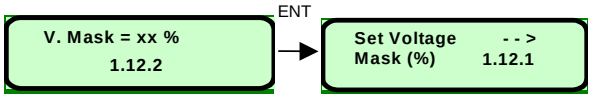

The Voltage Mask defines the range of Vout values for which the STS does not operate.
The Voltage Mask limits are expressed as a percentage “xx” of the Vout (see Set Vout on page 8).For instance, if you set Vout =230Vac and the Voltage Mask at 20% then the STS will activate only Vout falls outside the 184-276Vac range (voltage mask width in Fig.7).
The settable percentage range is 15% to 50% of Vout. Factory setting: 15%

Example
Assuming that the current setting for STS mode is the ON-Line mode (the inverter is the primary source for the load), and that the output voltage is within the limits of the voltage mask, then the STS remains open (the load connected to the inverter). Otherwise, when the Vout lies beyond the voltage mask limits, the STS commutes the load to the grid (which is the secondary or back-up source in this case).
The check of the Vout is made on its peak values.

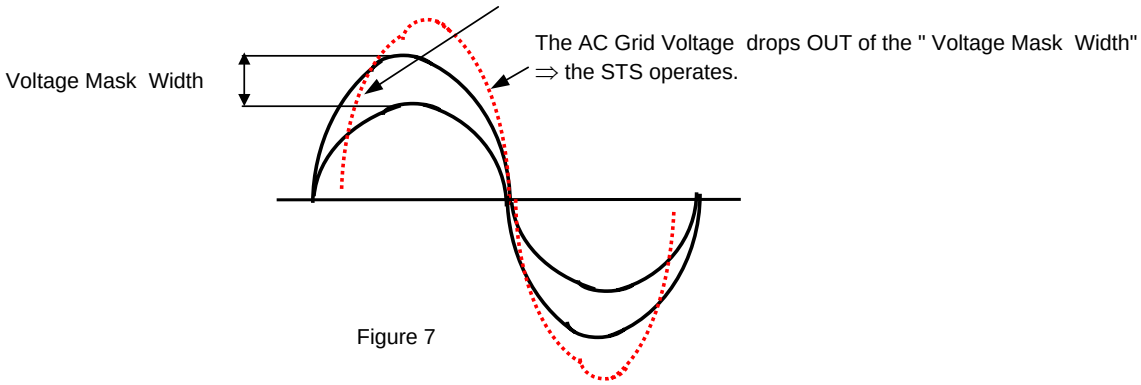

Figure 7

SET Vrms

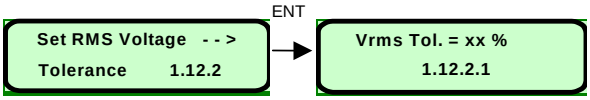

The STS can operate not only based on the peak value of Vout but also based on the RMS value. With the "Set V_{RMS}" screen you can define a percentage “xx” of the Vout within which the STS does not operate.

For instance, if Vout =230Vac and V_{RMS} =10% then the STS is activated only if the output RMS value V_{RMS} falls outside the 253-207Vac range.

The percentage range is 5% to 50% of Vout. Factory setting: 10%

SET Frequency Tolerance

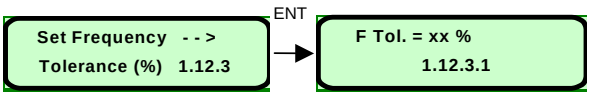

- With this screen you can define the max. frequency over which the STS is activated.
- The allowed range is 1 to 10% of the nominal frequency set by the SETTINGS menu (see pag.8: SET frequency screen). Factory setting: 2%

Example
If the frequency is set on 50Hz in the SETTINGS menu and the Frequency tolerance is set at 3% then the STS changed state only if the frequency of the primary source exceeds 51.5Hz or falls below 48.5 Hz.

SET Restore Time

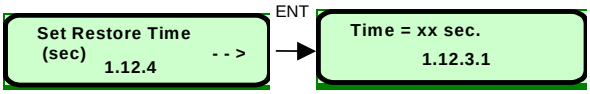

The Restore Time is the time “xx” elapsed after the STS is activated and before the STS attempts to restore the previous mode. During this time the STS checks the system parameters (Vout, V_{GRID}, Frequency,...) to verify if they all have returned to the normal range, so that the load can be switched back safely to the primary source.

The Restore time range is 10 - 7200 sec with in increments of 5 seconds. Factory setting: 10seconds.

Set Transfer Switch Mode

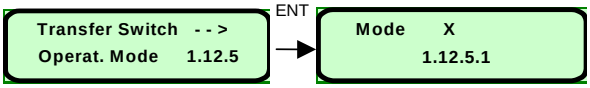

The STS can operate in the following modes:
- Mode 0 ("X"=0):):" OFF Mode": the STS is NOT CONNECTED.
- Mode 1 ("X"=1): On Line mode: the STS normally remains open (the load is connected to the inverter output), and connects the load to the grid when it closes.
- Mode 2 ("X"=2): Off Line mode: the STS normally remains closed (the load is connected to the grid), and connects the load to the inverter when it is opens.
- Mode 3 ("X"=3): Manual mode: the STS status is configured by Set Manual Switch screen.

Factory setting: Mode 1 (On-Line mode)

Set Manual Switch

The MANUAL SWITCH submenu is enabled by the selecting the Mode 3 (Manual mode) setting in the TRANSFER-SWITCH-MODE submenu.

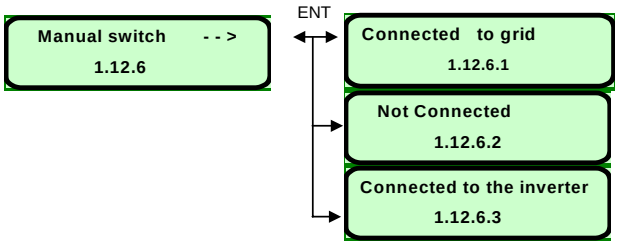

With this setting it is possible to force the STS to be connect the load to the grid to the inverter or to maintain the load disconnected.

7 The STATUS menu

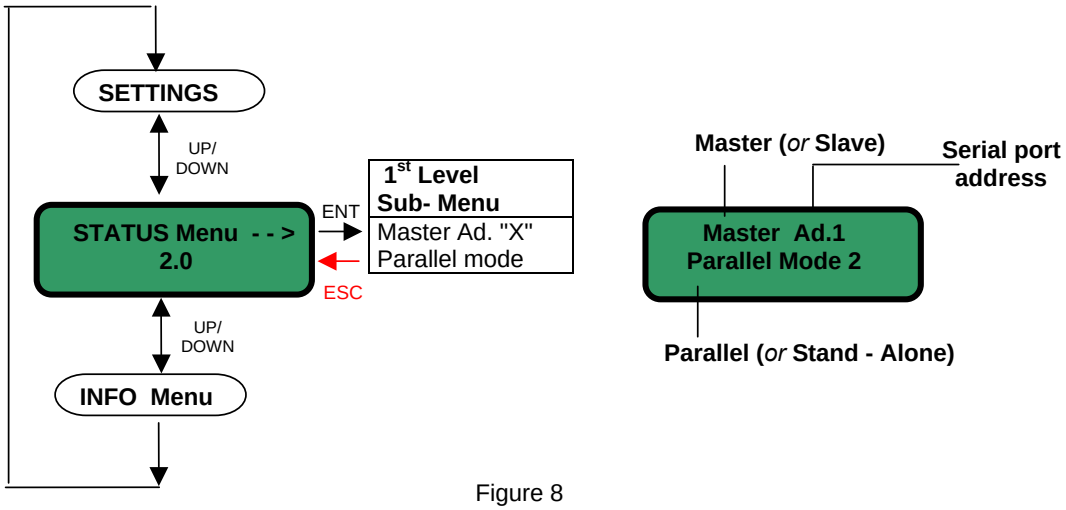

Figure 8

The STATUS menu shows:

- the current status (**Master** *or* **Slave**)
- the current configuration mode (**Stand Alone mode** *or* **Parallel mode**)
- the serial port address

8 The INFO menu

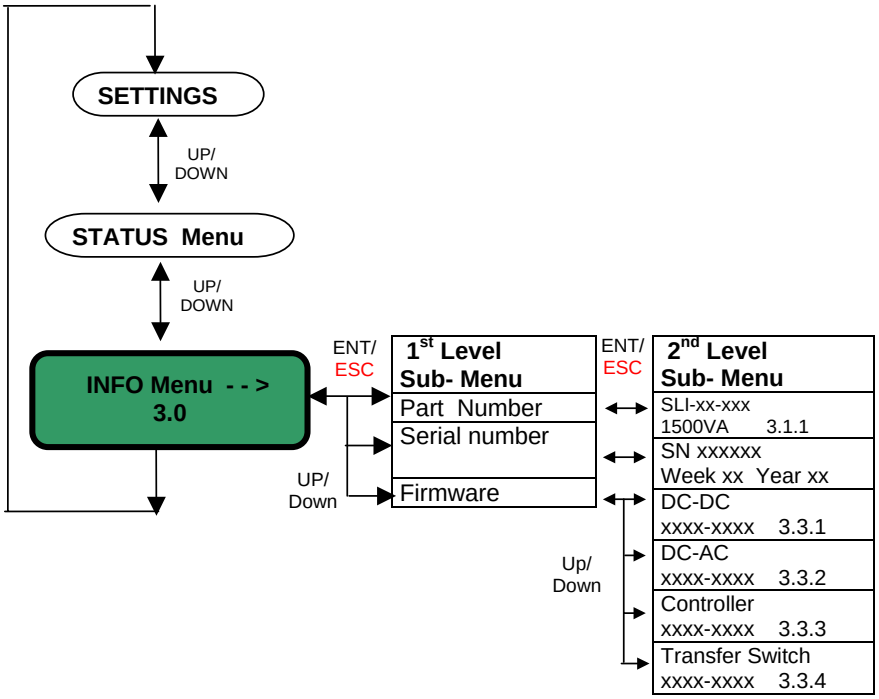

Figure 9

With the INFO menu you can obtain information about:

- **Model Number** : SLI - xx - xxx

Factory description code — Vinput (48 *or* 24) — Vout (230 *or* 115Vac)

- **Serial Number**: factory serial number, including manufacturing week & year

- **Firmware revision**
  DSP Software release for the DC-DC stage
  DSP Software release for the DC-AC stage
  DSP Software release for the Controller stage

Appendix A : The SERVICE menu

The access to the SERVICE submenu should be reserved to authorized operators only because it allows to operate on critical system parameters.

To get the access at the SERVICE submenu you have to enter the SETTINGS menu with the 1ST level password (default password: "0000"), select the sub-menu SERVICE and insert the 2ND level password (default password: "1111").

Once entered the SERVICE submenu it is possible to conduct the following tasks:

1. Change the operating mode
- Stand-alone mode (default mode) ⇒ set the "X" = 0 on the 2ND Level Sub- Menu on Fig.A.1
- Parallel mode ⇒ set the "X" = 2 on the 2ND Level Sub- Menu on Fig.A.1

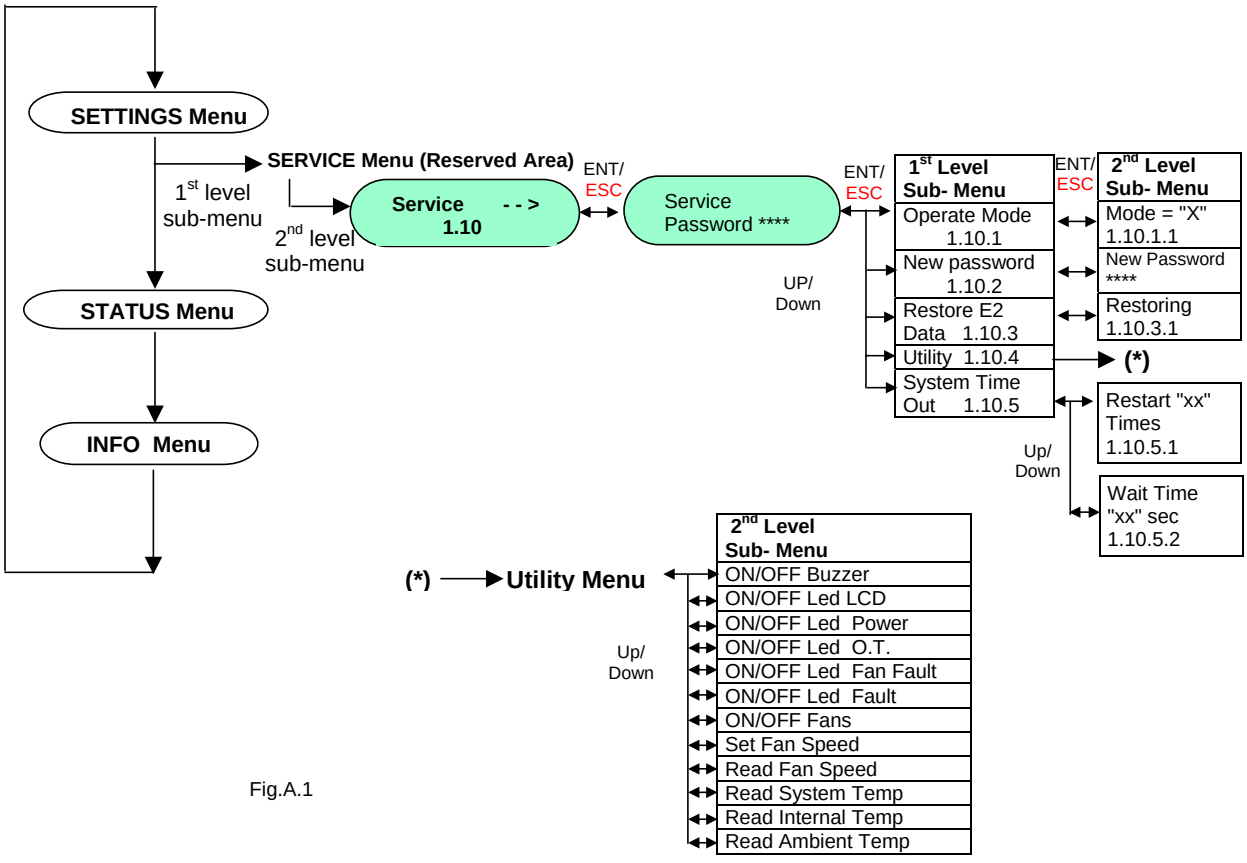

Fig.A.1

1. Change the 2ND level Password
   Define a new password for the "SERVICE" Menu. The password length is 4 digits. Use the <UP> and <DOWN> keys to type the characters on the display. Press <ENTER> to confirm.

2. Restore the factory settings
   With this option you can restore all the factory settings (see "Appendix B").
   Select the items "Restore E2 data" and press <ENTER>. The screen "Restoring" appears on the display.
   Press <ENTER> to restore the factory settings.

3. UTILITY
   This submenu is reserved to manufacturer's personnel for testing the operative condition of the LED's and fans, as well as to monitor the temperature. We recommend you do not change the factory settings in this submenu.

4. SET THE TIME OUT
   The Time Out is the time waited by the unit before attempting to start again after a general fault is occurred.

   Restart mode
   The "Restart Mode" can be the "Restart xx times" mode or the "Restart always" mode.
   The unit tries to restart a certain numbers ("xx") of times, after which the unit latches up.

   Set "xx" from 1 to 10 using <UP> and <DOWN> keys. Press <Enter> to confirm. Factory setting = 5 times.

   Set "xx" >10 and press the <ENTER> to have the unit continuously try to restart.

   The default protection mode for all protections is *Restart 5 times.*

   Wait Time
   The Wait Time is the time between two restart attempts (only for the "Restart xx times" mode).
   The Wait Time can be defined in the following range: 2sec to 60sec. Factory setting **=** 5 sec.

Appendix B: factory settings

FACTORY SETTINGS TABLE (values on brackets refer to the 115Vac Inverter Version)	
SETTINGS MENU	
Options	**Default assignaments**
- Password	0000
- Vout	230Vac (115Vac)
- Frequency	50Hz (60Hz)
- Ilimit	8Apk (14Apk)
- Display light length	20 sec.
- Key click ON/OFF	ON
- Auto-start ON/OFF	Auto-start OFF
- Remote ON/OFF	Remote OFF
-	
PROTECTIONS MENU (Sub-Menu of SETTINGS MENU)	
- Mode	Auto-restart (all protections)
- Restart Attemps	5 times
- Wait Time (between 2 attemps)	5 sec.
TRANSFER SWITCH MENU (Sub Menu of SETTINGS MENU)	
- Voltage Mask	15% Vout
- RMS Voltage Tolerance	10% Vout
- Frequency Tolerance	2% of nominal frequency
- Restore Time	10 sec.
- Operat. Mode	"On-Line " = "Mode 1"
SERVICE MENU (Sub-Menu of SETTINGS MENU)	
- Password	1111
- Operat. Mode	"Stand-alone" = "Mode 0"
System Time-out	
- Mode	Auto-restart
- Restart Attemps	5 times
- Wait Time (between 2 attemps)	5 sec.

This document is believed to be correct at time of publication and UNIPOWER LLC accepts no responsibility for consequences from printing errors or inaccuracies. Specifications are subject to change without notice.