UNIPOWER CORPORATION

Call U.S.: (954) 346-2442 • sales@unipower-corp.com
Call U.K.: +44(0) 1903 768200 • info@unipower-europe.com

BD SERIES SINGLE OUTPUT MEDICAL SWITCHERS

200 Watts U-Channel with Active PFC

FEATURES

- Full Medical Approvals
- Universal AC Input
- Outputs from 12VDC to 48VDC
- Active Power Factor Correction
- Class B EMI

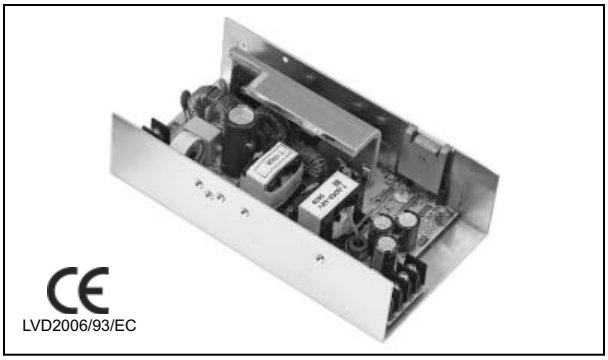

LVD2006/93/EC

STANDARD MODELS

Model Number	Output Voltage	Output Current	Output Power	Total Regulation	Ripple & Noise (Vp-p)
BD3000M	12V	16.66A	200W	5%	240mV
BD4001M	16V	12.50A	200W	5%	300mV
BD4003M	19V	10.53A	200W	5%	300mV
BD4004M	20V	10.00A	200W	5%	300mV
BD5000M	24V	8.33A	200W	5%	300mV
BD8000M	36V	5.555A	200W	5%	300mV
BD7000M	48V	4.166A	200W	5%	300mV

SPECIFICATIONS

Typical at Nominal 115/230VAC Line, Full Load and 25°C Unless Otherwise Noted.

INPUT SPECIFICATIONS

Nominal Input Voltage 100-240VAC
Input Operating Range 90-264VAC
Power Factor .....>0.90
Input Frequency 47-63Hz
Inrush Current .....<60A Peak @ 230VAC, cold start
Leakage Current ..... <300µA @ 264VAC
Input EMI Filter .....EN55018 Curve B
FCC20780 pt. 18 Curve B
Harmonic Distortion..... EN61000-3-2 class D
Input Immunity, Conducted
Fast Transients, Line-Line .....±1kV (EN61000-4-4)
Surges, Line-Line .....±1kV (EN61000-4-5)
Surges, Line-Ground .....±2kV (EN61000-4-5)
Input Protection .....Internal Fuse

OUTPUT SPECIFICATIONS

Total Output Power, Continuous, Max .....200 Watts
Total Regulation[1], ...see model listing
Ripple & Noise, Pk-Pk[2] .....see model listing
Holdup Time, Full Load @ 115VAC 16mS
Dynamic Response[3] 300µS
Temperature Coefficient ..... ±0.04%/°C
Minimum Load 0A
Overload Protection ..... 110-160% Full Load, Auto Recovery
Overvoltage Protection ..... 110-130% Rated Output
No Load Power Consumption ..... <500mW

GENERAL SPECIFICATIONS

Efficiency[4] .....87% at Full Load
Switching Frequency 75kHz
Isolation, Class I, min.[5]
Input-Output 4000VAC/5656VDC
Input-Ground 1500VAC/2121VDC
Output-Ground 50VDC
MTBF (Bellcore) .....466,000 Hours
EMI Standards..... EN60601-1-2
Safety Standards UL60601-1, CSA22.2 No.60601-1
..... EN60601-1, IEC60601-1

ENVIRONMENTAL SPECIFICATIONS

Operating Temperature .....0°C to 70°C Ambient
Derating..... 2.5% / °C, 40°C to 70°C
Storage Temperature.....-10°C to +85°C
Cooling .....Natural Convection

PHYSICAL SPECIFICATIONS

Format .....U-Channel Chassis
Dimensions, Inches(mm)..... 1.97 H x 3.74 W x 6.94 D
(50 x 95 x 176)
Weight .....1.54 lbs. (0.7 kg.)

NOTES:
1. No load to full load, including line regulation and load regulation.
2. 20MHz bandwidth. Measure with 0.1µF ceramic and 10µF tantalum capacitors in parallel across the output.
3. <4% deviation recovering to within 1% for 25% load change.
4. Typical efficiency is at low end of range for 5V output and at high end of range for 48V output.
5. Input-output isolation figure is for isolation components only. 100% production Hipot tested.

MECHANICAL SPECIFICATIONS & CONNECTION DETAILS

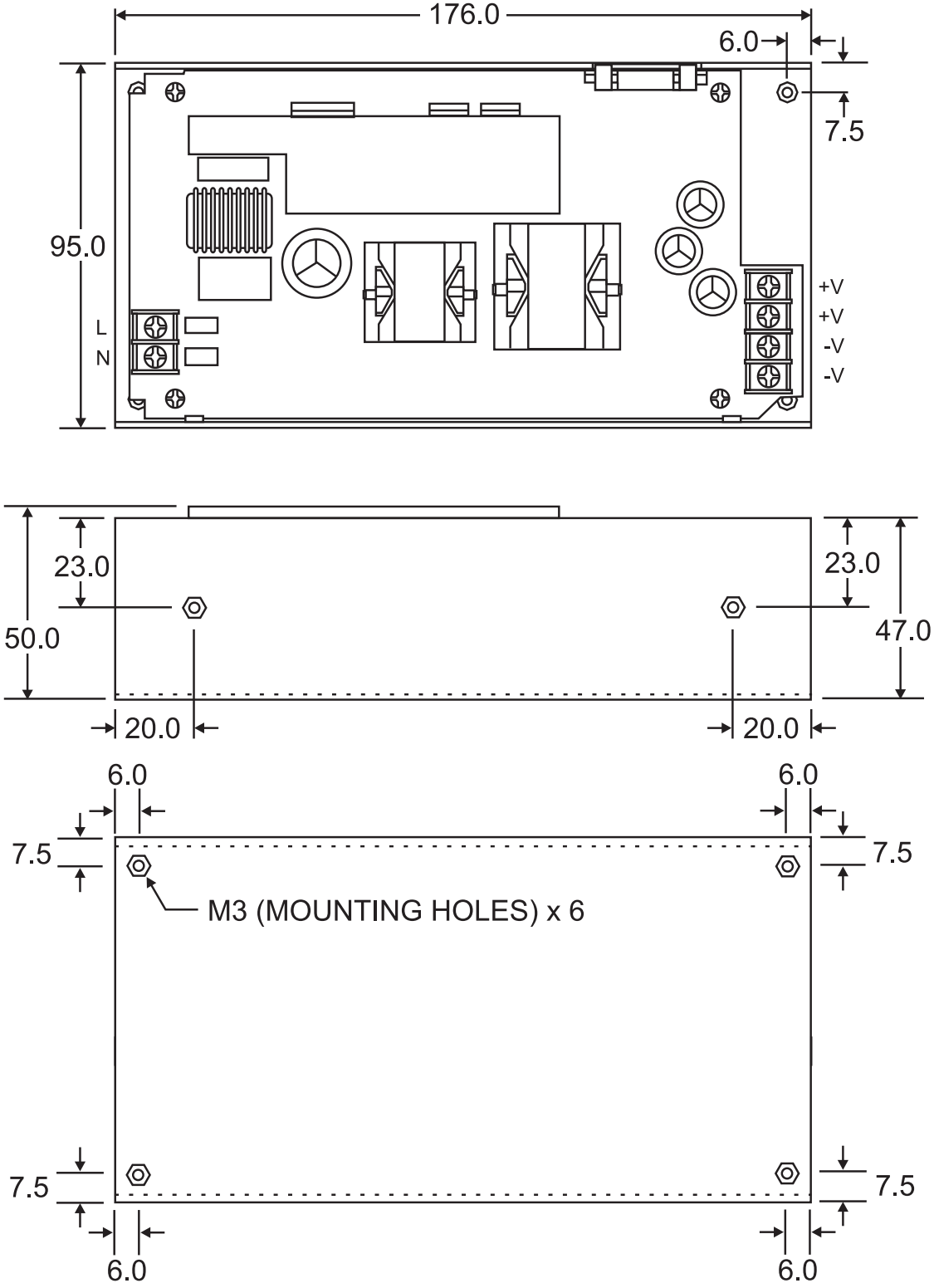

bdm-ds-revB1.indd