ARE SERIES
SINGLE-PHASE INPUT
Installation and Operating Instructions for Standby Power Chargers
PRODUCT MANUAL

UNIPOWER, LLC
65 Industrial Park Rd
Dunlap, TN 37327
Phone: +1-954-346-2442
Toll Free: 1-800-440-3504
Web site – www.unipowerco.com

RS-759, Rev. 13

RECEIVING INSTRUCTIONS
&
GENERAL EQUIPMENT INFORMATION

Please Note: For your protection, the following information and the product manual should be read and thoroughly understood before unpacking, installing, or using the equipment.

UNIPOWER, LLC presents all equipment to the delivering carrier securely packed and in perfect condition. Upon acceptance of the package from us, the delivering carrier assumed responsibility for its safe arrival to you. Once you receive the equipment, it is your responsibility to document any damage the carrier may have inflicted, and to file your claim promptly and accurately.

1. PACKAGE INSPECTION

1.1 Examine the shipping crate or carton for any visible damage: punctures, dents, and any other signs of possible internal damage.

1.2 Describe any damage or shortage on the receiving documents, and have the carrier sign their full name.

1.3 If your receiving freight bill notes that a Tip-N-Tell is attached to your freight, locate it. If the Tip-N-Tell arrow has turned even partially blue, this means the freight has been tipped in transport. Make sure the carrier notes this on your receipt before you sign for the freight.

2. EQUIPMENT INSPECTION

2.1 Within fifteen days, open the crate and inspect the contents for damages. While unpacking, be careful not to discard any equipment, parts, or manuals. If any damage is detected, call the delivering carrier to determine appropriate action. They may require an inspection.

***SAVE ALL SHIPPING MATERIAL FOR THE INSPECTOR TO SEE!**

2.2 After the inspection has been made, call UNIPOWER. We will determine if the equipment should be returned to our plant for repair, or if some other method would be more expeditious. If it is determined that the equipment should be returned to UNIPOWER, ask the delivering carrier to send the packages back to UNIPOWER at the delivering carrier's expense.

2.3 If repair is necessary, we will invoice you for the repair so that you may submit the bill to the delivering carrier with your claim form.

2.4 It is your responsibility to file a claim with the delivering carrier. Failure to properly file a claim for shipping damages may void warranty service for any physical damages later reported for repair.

3. HANDLING

Equipment can be universally heavy or top-heavy. Use adequate human power or equipment for handling. Until the equipment is securely mounted, be careful to prevent the equipment from being accidentally tipped over.

4. NAMEPLATE

Each piece of UNIPOWER equipment is identified by a part number on the nameplate. Please refer to this number in all correspondence with UNIPOWER.

5. INITIAL SETTINGS

All equipment is shipped from our production area *fully checked and adjusted*. Do not make any adjustments until you have referred to the technical reference or product manual.

6. SPARE PARTS

To minimize downtime during installation or operation, we suggest you purchase spare fuses, circuit boards and other recommended components as listed on the Recommended Spare Parts List in the back of the product manual. If nothing else, we strongly recommend stocking spare fuses for all systems.

REVISION HISTORY

REV	DESCRIPTION	CHECKED/APPROVED & DATE
11	See PCO 45405	CJM / 8-8-19
12	See ECN 46071	DBW / 2-28-23
13	See ECN 46140	JPR / 1-4-24

PRODUCT MANUAL SUMMARY

This product manual provides installation, operation, maintenance, and troubleshooting procedures for the UNIPOWER *ARE Series* Chargers.

Thank you for purchasing an *ARE Series* Charger. We at UNIPOWER are proud of the quality of our products and welcome any suggestions to further improve our design to fit your needs.

PROPRIETARY AND CONFIDENTIAL

The information contained in this product manual is the sole property of UNIPOWER, LLC. Reproduction of the manual or any portion of the manual without the written permission of UNIPOWER, LLC is prohibited.

© Copyright UNIPOWER, LLC

DISCLAIMER

Data, descriptions, and specifications presented herein are subject to revision by UNIPOWER, LLC without notice. While such information is believed to be accurate as indicated herein, UNIPOWER, LLC makes no warranty and hereby disclaims all warranties, express or implied, with regard to the accuracy or completeness of such information. Further, because the product(s) featured herein may be used under conditions beyond its control, UNIPOWER, LLC hereby disclaims and excludes all warranties, express, implied, or statutory, including any warranty of merchantability, any warranty of fitness for a particular purpose, and any implied warranties otherwise arising from course of dealing or usage of trade. The user is solely responsible for determining the suitability of the product(s) featured herein for user's intended purpose and in user's specific application.

Throughout the remainder of this manual, "UNIPOWER" will mean "UNIPOWER, LLC."

PERSONNEL REQUIREMENTS

Installation, setup, operation, and servicing of this equipment should be performed by qualified persons thoroughly familiar with this Product Manual and Applicable Local and National Codes. A copy of this manual is included with the equipment shipment.

TABLE OF CONTENTS

INTRODUCTION ..... **VII**

1. RECEIVING AND INSTALLATION **1-1**
1.1 RECEIVING 1-1
1.2 IDENTIFICATION 1-1
1.3 UNPACKING AND HANDLING 1-1
1.4 STORAGE 1-1
1.5 LOCATION 1-1
1.6 MOUNTING 1-1
1.7 POWER SOURCE 1-2
1.8 CONNECTIONS 1-2
1.9 GROUNDING INSTRUCTIONS 1-3
1.10 INSTALLER'S DIAGRAM 1-3
1.11 PRODUCT SUPPORT 1-4

2. EQUIPMENT OPERATION AND MAINTENANCE **2-1**
2.1 EQUIPMENT OPERATION 2-1
2.1.1 AC Turn-On Procedure 2-1
2.1.2 Alternate AC Turn-On Procedure 2-1
2.1.3 AC Turn-Off Procedure 2-1
2.1.4 Float/Equalize Settings 2-1
2.2 FLOAT VOLTAGE ADJUSTMENT 2-2
2.3 EQUALIZE VOLTAGE ADJUSTMENT 2-2
2.4 CURRENT LIMIT ADJUSTMENT 2-2
2.5 COARSE VOLTAGE ADJUSTMENT (24 AND 48 VOLT UNITS ONLY) 2-3
2.6 HIGH VOLTAGE SHUTDOWN (HVSD) 2-3
2.7 AC POWER FAILURE ALARM RELAY (ACPFAR) 2-3
2.8 ROUTINE MAINTENANCE 2-3

3. TROUBLESHOOTING **3-1**
3.1 GENERAL DESCRIPTION OF OPERATION 3-1
3.2 TROUBLESHOOTING CHART 3-2
3.3 CHECKING COMPONENTS 3-3

4. DRAWINGS **4-1**
4.1 ASSEMBLY AND SCHEMATIC DIAGRAM FOR SINGLE-PHASE "ARE" HIGH VOLTAGE SHUTDOWN MBC-3970-UNIT VOLTAGE 4-31
4.1.1 Instructions 4-31

5. OPTIONAL ALARMS AND ACCESSORIES **5-1**
5.1 LIGHTNING ARRESTER 5-1
5.2 BLOCKING DIODE 5-1
5.3 EQUALIZE TIMER 5-1
5.4 HIGH AND LOW VOLTAGE ALARM RELAYS DESCRIPTION 5-2
5.5 HIGH AND LOW VOLTAGE ALARM 5-3
5.5.1 Connections 5-3
5.5.2 Adjustment 5-3
5.6 HIGH VOLTAGE ALARM WITH ADJUSTABLE TIME DELAY 5-4
5.6.1 High Voltage Alarm Connection Diagram 5-4
5.6.2 Connections 5-4
5.6.3 Operation 5-4
5.6.4 Adjustment Procedure 5-4
5.6.5 Specifications 5-4
5.7 LOW VOLTAGE ALARM WITH ADJUSTABLE TIME DELAY 5-5
5.7.1 Low Voltage Alarm Connection Diagram 5-5
5.7.2 Connections 5-5

5.7.3 Operation 5-5
5.7.4 Adjustment Procedure 5-5
5.7.5 Specifications Same as High Voltage Alarm With Time Delay 5-5
5.8 NO CHARGE ALARM RELAY AND LOAD SHARING 5-6
5.8.1 Description 5-6
5.8.1.1 No Charge Alarm (Low Current Alarm) 5-6
5.8.1.2 Load Sharing 5-7
5.8.2 Connections 5-7
5.8.3 Adjustment 5-7
5.8.4 For Two Power Supplies 5-7
5.8.5 For More Than Two Power Supplies 5-7
5.8.6 Operational Notes 5-7
5.8.7 Specifications 5-7
5.9 GROUND DETECTION ALARM RELAY (WITH LIGHTS) 5-10
5.9.1 Description 5-10
5.9.2 Connections 5-10
5.10 GROUND DETECTION VOLTMETER SWITCH 5-10
5.10.1 Description 5-10
5.10.2 Operation 5-10
5.11 GROUND DETECTION LIGHTS 5-10
5.11.1 Description 5-10
5.11.2 Operation 5-10
5.12 EQUALIZE TIMER SETTING INFORMATION 5-16

6. SPECIFICATIONS "ARE" SINGLE-PHASE RECTIFIERS 6-1
6.1 GENERAL 6-1
6.2 DC OUTPUT RATINGS 6-1
6.2.1 Current and Voltage Ratings 6-1
6.2.2 Regulation 6-1
6.3 AC INPUT RATINGS 6-1
6.4 STANDARD FEATURES 6-1
6.5 ENVIRONMENTAL RATINGS 6-2
6.6 OPTIONAL EQUIPMENT 6-2
6.7 "ARE" SINGLE-PHASE GENERAL SPECIFICATIONS 6-2

FIGURES

FIGURE 3-1: BLOCK DIAGRAM FOR A TYPICAL “ARE” POWER SUPPLY 3-1
FIGURE 4-1: MBC-3410B CABINET ASSEMBLY – 12 ¼” CABINET 4-1
FIGURE 4-2: MBC-3420B CABINET ASSEMBLY – 24 ½” CABINET 4-5
FIGURE 4-3: MBC-3420B CABINET ASSEMBLY – 24 ½” CABINET 4-8
FIGURE 4-4: MBC-3700B CABINET ASSEMBLY – 30” CABINET 4-9
FIGURE 4-5: MBC-3716B CABINET ASSEMBLY – 36” CABINET 4-12
FIGURE 4-6: DIMENSIONS FOR MBC-3410B CABINET 12 ¼” HIGH 4-17
FIGURE 4-7: DIMENSIONS FOR MBC-3420B CABINET 24 ½” HIGH 4-17
FIGURE 4-8: DIMENSIONS FOR MBC-3700B CABINET 30” HIGH 4-18
FIGURE 4-9: DIMENSIONS FOR MBC-3716B CABINET 36” HIGH 4-18
FIGURE 4-10: CONNECTION DIAGRAM FOR “ARE” 12-INCH AND 24-INCH CABINETS (120/208/240 VAC) 4-19
FIGURE 4-11: CONNECTION DIAGRAM FOR “ARE” 24-INCH CABINET (208/240/480 VAC) 4-20
FIGURE 4-12: CONNECTION DIAGRAM FOR “ARE” 30-INCH CABINET (120/208/240 VAC) 4-21
FIGURE 4-13: CONNECTION DIAGRAM FOR “ARE” 30-INCH CABINET (208/240/480 VAC) 4-22
FIGURE 4-14: CONNECTION DIAGRAM 36-INCH CABINET (120/208/240 VAC) 4-23
FIGURE 4-15: CONNECTION DIAGRAM FOR “ARE” 36-INCH CABINET (208/240/480 VAC) 4-24
FIGURE 4-16: SCHEMATIC DIAGRAM FOR “ARE” 12 AND 24 INCH CABINET 4-25
FIGURE 4-17: SCHEMATIC DIAGRAM FOR “ARE” 24 INCH CABINET (208/240/480 VAC) 4-25
FIGURE 4-18: SCHEMATIC DIAGRAM FOR “ARE” 30 INCH CABINET (120/208/240VAC) 4-26
FIGURE 4-19: SCHEMATIC DIAGRAM FOR “ARE” 30 INCH CABINET (208/240/480VAC) 4-27
FIGURE 4-20: SCHEMATIC DIAGRAM FOR “ARE” 36-INCH CABINET (120/208/240 VAC) 4-28
FIGURE 4-21: SCHEMATIC DIAGRAM FOR “ARE” 36-INCH CABINET (208/240/480 VAC) 4-29
FIGURE 4-22: SCHEMATIC DIAGRAM FOR “ARE” CONTROL BOARD 4-32
FIGURE 4-23: ASSEMBLY DIAGRAMS FOR “ARE” CONTROL BOARD 4-33
FIGURE 5-1: CIRCUIT BOARD LAYOUT 5-2
FIGURE 5-2: CONNECTION DIAGRAM “ARE” HIGH AND LOW VOLTAGE ALARM 5-2
FIGURE 5-3: HIGH OR LOW DC VOLTAGE ALARM WITH ADJUSTABLE TIME DELAY 5-6
FIGURE 5-4:NO CHARGE ALARM WITH LOAD SHARING CIRCUIT BOARD 5-9
FIGURE 5-5: CONNECTION DIAGRAM “ARE” NO CHARGE ALARM WITH LOAD SHARING 5-9
FIGURE 5-6: CONNECTION DIAGRAM “ARE” GROUND DETECTION ALARM 5-11
FIGURE 5-7: GROUND DETECTION ALARM RELAY 5-11
FIGURE 5-8: GROUND DETECTION ALARM SCHEMATIC DIAGRAM 5-12
FIGURE 5-9:GROUND DETECTION (GROUND LIGHTS ONLY, KBC-4210) 5-12
FIGURE 5-10: ASSEMBLY AND CONNECTION DIAGRAM GROUND DETECTION LIGHTS WITH SWITCH 5-13
FIGURE 5-11: GROUND LIGHTS WITH CENTER OFF MOMENTARY 5-13
FIGURE 5-12: ASSEMBLY AND CONNECTION DIAGRAM ARE SINGLE-PHASE VOLTMETER GROUND DETECTION SWITCH 5-13
FIGURE 5-13: LIGHTNING ARRESTER CONNECTIONS 5-14
FIGURE 5-14: BLOCKING DIODE ASSEMBLY 5-15
FIGURE 5-15: ASSEMBLY AND CONNECTION DIAGRAM EQUALIZE TIMER 5-16
FIGURE 5-16: ASSEMBLY AND CONNECTION DIAGRAM EQUALIZE TIMER (CONTINUE) 5-16

TABLES

TABLE 1-1: LIST OF STANDARD MODELS 1-3
TABLE 2-1: TYPICAL FLOAT/EQUALIZE VOLTAGES 2-1
TABLE 4-1: 24/48V DC CONTROL BOARD 4-34
TABLE 4-2: 130V DC C12 CONTROL BOARD 4-34

INTRODUCTION

The purpose of this manual is to instruct the user of this equipment on the handling, installation, operation, and maintenance of the equipment. Sections on theory of operation and troubleshooting, in addition to schematic and wiring diagrams provide adequate information for maintenance personnel to service the equipment.

The replacement parts list can be used as a guide for a stock parts program, if so desired, or to simplify and expedite the procurement of needed parts.

Sections on available models, ratings, and options will aid in the selection of the proper equipment for future applications.

First-class materials and workmanship were utilized in the manufacture and production of this equipment. It was produced under strict quality control supervision, carefully inspected, and thoroughly tested, before shipment. It will give many years of productive and trouble-free service.

1. RECEIVING AND INSTALLATION

1.1 RECEIVING

This equipment was assembled, tested and packed with care to enable the purchaser to install and place it in operation with a minimum of time and labor. Immediately upon receiving the equipment, it should be checked against the memorandum of shipment.

1.2 IDENTIFICATION

All UNIPOWER' Model ARE power supplies are equipped with a full identification nameplate. When requesting information, or ordering spare parts, please specify the Model No., Serial No., and Spec. No. of the charger. This information will speed your request.

1.3 UNPACKING AND HANDLING

The power supply is shipped attached to a wooden skid. This facilitates handling with a lift truck by inserting the forks under the bottom of the skid. The smallest units are packed inside the carton that is banded to the skid. The larger units are bolted to the skid and covered by the shipping carton that is banded to the skid. To unpack, cut the bands (**Caution: Do not stand in front of steel bands since they may whip out when cut**) and remove carton from the skid. Next, either remove the unit from the carton or unbolt the unit from the skid.

Check shipping carton, before discarding, for the packing slip and other material, which may be contained in it.

Carefully inspect the unit for loosened connections or mountings, dislodged circuit boards, etc., which can occur during shipping. Report any findings to our nearest sales office.

1.4 STORAGE

If you are not going to use the equipment immediately, store it (fully packed, if possible) in a clean dry place and protect it from possible damage or overhead drip.

All ARE Series power supplies can be safely stored for up to one year at temperatures ranging from –40 C to +85 C.

1.5 LOCATION

Caution: 130 Volts, 35 and 50A power supplies may have hot surfaces at top and rear of cabinet. Install so that these surfaces are not likely to be contacted by personnel.

The power supply should be installed in a convenient, cool, clean, dry place, protected from overhead drip. Like all electrical equipment, it should not be mounted where it would be subjected to extreme vibration, which could possibly cause a malfunction.

Adequate ventilation is required for proper functioning. The environmental operating limits for the ARE Series power supplies are:

Ambient temperature: 0 C to 50 C
Relative humidity: 0 to 95%
Altitude: 10,000 ft. (3,000 meters) or less

1.6 MOUNTING

These units may be mounted on walls, relay racks, or floors. All units are furnished with brackets for wall or relay rack mounting. Optional floor mounting brackets are furnished upon request, as well as extra-wide brackets for large relay racks.

One-fourth (1/4)-inch hardware must be used in all available mounting holes to mount the brackets to the cabinet. See cabinet dimensions on (Figures 4-6, 4-7, 4-8, & 4-9) for minimum hardware recommendations for mounting the power supply to the wall, relay rack, or floor.

1.7 POWER SOURCE

The nominal voltage of the AC source to which the equipment is to be connected must be the same as the nominal voltage for which the equipment input is set. Check the card supplied with the equipment to see if the unit is connected for your incoming ac line voltage. If it is not, reset the unit following the voltage changeover instructions on the schematic diagrams Section 4 of this manual.

For the equipment to function properly, the AC supply voltage must be within the following ANSI Standard Ranges:

Nominal Voltage	**Minimum**	**Maximum**
120V AC	106V AC	127V AC
208V AC	184V AC	220V AC
240V AC	212V AC	254V AC
480V AC	424V AC	508V AC

Other voltages must be ±10% of the nominal voltage for which the charger is connected. The frequency of the AC supply must be the specified nominal frequency ±5%.

Table 1-1 lists the AC input currents at rated output for each ARE power supply model.

If the sustained AC voltage fluctuations are outside the specified ranges, contact the Field Service Department of UNIPOWER.

1.8 CONNECTIONS

Caution: This equipment must be installed by competent electrical personnel, familiar with both local and national electrical codes.

All connection terminals are reached through the front door. The input and output power connection points are located on the accessory panel. On large units, the input connection points are located on the back panel. The optional alarm connection terminal block is located on the bottom screen.

All equipment is furnished with conduit entrances on each side panel. Clear space is provided in the floor area of the cabinet for those cases when bottom entrance for cables is desirable.

The power supply should be connected to either a fused AC disconnect switch or an AC circuit breaker. Before selecting the rating of the protective device and the AC and DC cables sizes, check the equipment nameplate or Table 1-1 of this manual for the rated currents. National Electrical Code (NEC) should be followed in selecting the cables sizes. The rating of the protective device on the power circuit feeding the unit must equal or exceed equipment breaker rating.

Caution: Make sure the DC breaker is “OFF” and that the correct polarity (i.e. positive to positive and negative to negative) is observed when connecting the battery to the power supply. Loads should be connected to the battery terminals, not the power supply terminals (unless no battery is used).

1.9 GROUNDING INSTRUCTIONS

This power supply should be connected to a grounded, metal, permanent wiring system; or an equipment-grounding conductor should be run with circuit conductors and connected to the equipment-grounding terminal on the power supply. Connections to power supply should comply with all local codes and ordinances.

The terminal in the equipment labeled GROUND or GRD is provided for connection of the AC system ground. Internally, that terminal is connected to the cabinet. The power supply electrical circuits are isolated from ground so the AC supply must connect to terminals TS1-1 and TS2-2 on all models except the ARE130CE35 and ARE130CE50, which connects to TS8-1 and TS8-2.
See installer's diagram.

1.10 INSTALLER'S DIAGRAM

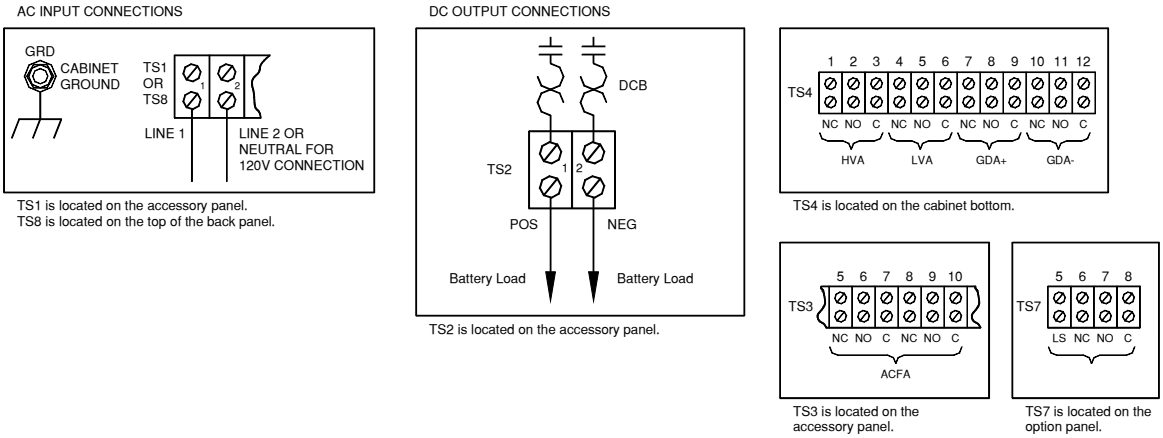

TABLE 1-1: LIST OF STANDARD MODELS

24 – Volt output

Model	Input Volts	AC Amps	AC Terminal Block cap. AWG Min.	Max.	DC Amps	Cabinet	Recommended DC cable size AWG	DC Circuit Breakers	Approx. Ship. Wt. Lbs.	Kgs.
ARE24AC6E	120/208/240	2/1.1/1	16	10	6	12	14	10	65	30
ARE24AC12E	120/208/240	4/2.3/2	16	10	6	12	10	20	72	33

48 – Volt output

Model	Input Volts	AC Amps	AC Terminal Block cap. AWG Min.	Max.	DC Amps	Cabinet	Recommended DC cable size AWG	DC Circuit Breakers	Approx. Ship. Wt. Lbs.	Kgs.
ARE48AC6E	120/208/240	4/2.3/2	10	16	6	12	14	10	72	33
ARE48AC12E	120/208/240	7/4/3.5	16	10	12	12	10	20	95	43

130 – Volt output

Model	Input Volts	AC Amps	AC Terminal Block cap. AWG Min.	Max.	DC Amps	Cabinet	Recommended DC cable Size AWG	DC Circuit Breakers	Approx. Ship. Wt. Lbs.	Kgs.
ARE130AC6F	120/208/240	8.5/5/4	16	10	6	12	14	10	100	46
ARE130AC12F	120/208/240	18/10/9	16	10	12	24	10	20	170	77
ARE130AC16F	120/208/240	22/13/11	16	10	16	24	10	20	185	84
ARE130AC25F	120/208/240	35/20/17	12	6	25	30	8	40	325	148
ARE130AC35F	120/208/240	50/29/25	12	4	35	36	8	50	460	209
ARE130CE12F	208/240/480	10/8.8/4.4	16	10	12	24	10	20	170	77
ARE130CE25F	208/240/480	20/17/8.5	12	6	25	30	8	40	325	148
ARE130CE35F	208/240/480	29/25/12.5	12	6	35	36	8	50	460	209
ARE130CE50F	208/240/480	40/35/17.5	12	6	50	36	4	70	600	273

1.11 PRODUCT SUPPORT

Product support can be obtained using the following addresses and telephone numbers.

Manufacturing facility:
UNIPOWER, LLC
65 Industrial Park Rd
Dunlap, TN 37327
United States

Phone: +1-954-346-2442
Toll Free: 1-800-440-3504
Web site – www.unipowerco.com

When contacting UNIPOWER, please be prepared to provide:

1. The product model number, spec number, S build number, and serial number - see the equipment nameplate on the front panel
2. Your company's name and address
3. Your name and title
4. The reason for the contact
5. If there is a problem with product operation:
   Is the problem intermittent or continuous?
   What revision is the firmware?
   What actions were being performed prior to the appearance of the problem?
   What actions have been taken since the problem occurred?

2. EQUIPMENT OPERATION AND MAINTENANCE

2.1 EQUIPMENT OPERATION

2.1.1 AC Turn-On Procedure

After making all connections to the power supply and making sure they are tight, follow this procedure to energize the equipment:

1. Place the "Float-Equalize" rocker switch in the "Float" position.
2. Close the DC circuit breaker. The battery will charge the filter capacitors connected across the DC output. The DC voltmeter on the front panel should read the battery voltage.
   *Note: In-rush current may trip the breaker. If so, reclose.
3. Close the AC circuit breaker. The output current will build up gradually due to the "walk-in" or "soft-start" characteristic of the equipment.

If the equipment is used without a battery, the capacitor will become charged when the AC breaker is closed. In this instance, both the current and voltage will build up gradually, provided some load is connected.

2.1.2 Alternate AC Turn-On Procedure

After making all connections to the power supply and checking them for tightness use the following procedure to energize the equipment:

1. Place the float/equalize rocker switch in the float position and set the local/remote switch to local.
2. Close the ac circuit breaker. Wait several seconds for the dc voltage to reach its set point.
3. Close the dc circuit breaker. If inrush of current trips the dc breaker, reset it and proceed. Refer to drawings in back of manual for location of switches.

2.1.3 AC Turn-Off Procedure

In order to de-energize or turn off the power supply, the following steps need to be followed in the indicated order:

1. Open the AC circuit breaker.
2. Open the DC circuit breaker.

2.1.4 Float/Equalize Settings

The float and equalize voltage levels are factory set. These settings are indicated by a red card attached on the inside front of the equipment. However, you may wish to change the settings to fit your particular application. The table 2-1 shows typical float and equalize voltages on a per cell basis for different types of batteries.

TABLE 2-1: TYPICAL FLOAT/EQUALIZE VOLTAGES

CELL VOLTAGE **BATTERY TYPE**	**FLOAT**	**EQUALIZE**
LEAD ANTIMONY (1.210 Specific gravity)	2.15 – 2.17	2.33
LEAD CALCIUM (1.210 Specific gravity)	2.17 – 2.25	2.33
NICKEL CADMIUM		
NICKEL IRON	1.43	1.55
LEAD-ACID, VALVE-REGULATED (SEALED)	1.50 – 1.55	1.60 – 1.65
(1.300 Specified gravity)	2.25 – 2.30	**
(1.290 Specified gravity)	2.25 – 2.30	**
(1.245 Specified gravity	2.17 – 2.22	**

* Equalize charge is required only if cells have experienced a discharge.
** Additional equalize charging is not recommended after initial equalization.
Consult battery manufacturer for particular recommendations.

2.2 FLOAT VOLTAGE ADJUSTMENT

Caution: Do not attempt to set either float or equalize voltage until the unit is out of the current-limit mode.

The setting of the float potentiometer "FL" on the instrument panel, determines the float voltage level, provided the rocker switch, also on the instrument panel, is in the "Float" position.

Turning the potentiometer clockwise increases the float voltage. Turning it counterclockwise decreases the voltage.

In order to correctly adjust, the float voltage, the battery should be in a fully charged condition with some load connected. Adjust the float potentiometer only while the equipment is operating.

2.3 EQUALIZE VOLTAGE ADJUSTMENT

Caution: Do not attempt to set either float or equalize voltage until the unit is out of the current limit mode.

The potentiometer for this adjustment is also on the instrument panel and is labeled "EQ".

Move the rocker switch to the "Equalize" position. Then with the equipment in operation, as it was during float voltage adjustment, make the equalize voltage adjustment.

The equalize voltage potentiometer works exactly as the float voltage potentiometer – a clockwise turn increases voltage; a counter clockwise turn decreases voltage.

The equalize voltage setting will depend upon the type of battery used (refer to chart) and the maximum limiting voltage of the connected load equipment.

NOTE: If used with lead-calcium alloy grid batteries, (not requiring regular equalizing), the equalize pot should be adjusted to zero (full CCW) to minimize the possibility of over voltage on the load.

2.4 CURRENT LIMIT ADJUSTMENT

Caution: Operating the equipment at greater than 110% of rating is not recommended for periods greater than 3-4 hours. The current limit setting should be left at 110% for normal operation.

The current limit is factory set at 110% of the rated output current of the power supply. If a lower current limit setting is desired, it may be set within the range of 50% and 110% of rated DC current. The setting of the current limit potentiometer, labeled "CL ADJ" and located on the bottom edge of the control board on the inside of the door, determines the current limit setting.

Turning the "CL ADJ" clockwise increases the current limit setting, turning it counter clockwise decreases the setting. To adjust, follow on of the procedures outlined below:

A. If dummy load is available:
    1. Increase load until 110% of charger rating is reached.
    2. Turn "CL ADJ" slowly counter clockwise until the desired setting is reached. For example, if 90% setting is desired and the equipment rating is 30 amps, stop when 27 amps is reached.

3. Remove dummy load.

B. If dummy load is not available, but some system load is:

1. Open the AC breaker.
2. Allow the battery voltage to drop to about 90% of float voltage. This will discharge the battery enough to require the equipment to operate in the current limit mode when it is turned on.
3. Close the AC circuit breaker. The unit should now be operating in the current limit mode with its output current equal to 110% of rated output.
4. Slowly turn "CL ADJ" counter clockwise until the desired setting is reached.

2.5 COARSE VOLTAGE ADJUSTMENT (24 AND 48 VOLT UNITS ONLY)

Caution: Do not attempt to set either float or equalize voltage until the unit is out of the current limit mode.

DESCRIPTION: This is normally a factory adjustment and will only be required when a replacement control board is installed. The coarse voltage adjustment is used to set the minimum float voltage setting and to match the control board to the voltage rating of the unit. The coarse adjusting potentiometer is located on the right hand side of the control board as it is mounted on the back of the door. It is turned down at a 45º angle so that it can be adjusted with the board mounted in place.

ADJUSTMENT: Place the float-equalize switch in the float position. Turn the float potentiometer fully counter clockwise. With less than 5% load on the unit adjust CP for a DC output voltage of two volts per cell or for the minimum float range desired. Turn CP counter clockwise to decrease the voltage and clockwise to increase the voltage. After the coarse adjustment is set, raise the DC output voltage back to the normal float setting of the battery with the float potentiometer.

2.6 HIGH VOLTAGE SHUTDOWN (HVSD)

Caution: Do not exceed the maximum system bus voltage when setting or checking this alarm.

DESCRIPTION: The high voltage shutdown monitors the DC output voltage and turns the unit off in case of an unacceptable high voltage condition, protecting both the load and the power supply. The HVSD turns the unit off by activating a trip coil on the AC input circuit breaker.

ADJUSTMENT: The high voltage shutdown level is set by a potentiometer on the HVSD printed circuit board. Turning clockwise increases the set point. To check the HVSD setting, place the power supply in equalize, observe and slowly raise the output voltage until the power supply shuts down. To set the HVSD, first turn voltage adjust POT fully clockwise. Place the power supply in equalize and adjust the output voltage to the desired trip level. It may be necessary to use the float potentiometer as well. Slowly turn POT counter clockwise until the power supply shuts down. Check the setting by following the procedure in the above paragraph.

RESET THE FLOAT AND EQUALIZE POTENTIOMETERS AFTER ADJUSTING ALARMS.

2.7 AC POWER FAILURE ALARM RELAY (ACPFAR)

The AC power failure alarm is a three-pole, double throw, 120 VAC relay connected across the primary of the power transformer. When AC power is removed, the relay de-energizes and may be used to provide an alarm signal. Two sets of form C contacts are terminated for use at TS-3. The contacts are rated ten amperes at 125 volts AC, 60 Hz.

2.8 ROUTINE MAINTENANCE

Caution: Before attempting any maintenance, make sure the AC input power is off and the battery is disconnected from the power supply.

1. Ventilation is of prime importance. Check the area around the unit; be sure that nothing interferes with the free flow of air through the unit.
2. All equipment performs better when clean, since there is better heat dissipation. The power supply should be blown out with low-pressure dry air to remove dust accumulations.
3. Connections should be clean and tight. Discoloration of terminals or wire is an indication of loose or corroded connections.
4. Capacitors (both AC and DC) should be checked for oil leakage, case or seal rupture, etc. All screw connections should be tightened or checked. DC capacitors over five years old or showing signs of degradation should be removed and checked for excessive leakage and/or replaced.
5. Float and equalize voltages should be checked and adjusted. See sections 2.2 & 2.3.
6. If possible, the operation of current limit should be checked as excessive overload may be damaging.
7. To insure accurate meter readings, they should be checked periodically against portable standards. Meters may be adjusted with the zero-adjusting screw on the face of the meter. Use care in doing so.

3. TROUBLESHOOTING

3.1 GENERAL DESCRIPTION OF OPERATION

The main components of ARE Series power supplies are shown in the accompanying block diagram. AC input power is applied through the input circuit breaker to the power transformer. The circuit breaker provides over-current and fault protection in case of malfunction or a short circuit in the input side of the equipment.

The power transformer in ARE Series power supplies is of the ferroresonant type. This class of transformers has the output coil on the same leg of the core as the resonant winding. This winding, together with the same resonant capacitor, maintains the core at a high level of saturation, resulting in fairly constant output voltage against changes in the input voltage. The high reactance of this type of transformer provides protection against overload and short circuit of the output.

To improve on the output voltage regulation of ferroresonant transformers against changes in load and input frequency, the ARE Series power supplies employ UNIPOWER's own controlled – ferro technique, which controls the level of core saturation.

This is accomplished by shunting the resonant circuit with a triac in series with an inductor. The electronic voltage/current control senses the start of the resonant capacitor charge cycle and also senses the output voltage level, which it compares with a reference voltage. The error signal that results determines the instant the triac turns on the interrupt the capacitor charge cycle and thus maintains the core saturation at the desired level.

Output current limit circuitry is also on the control board. When the current exceeds a preset level, a signal proportional to the output current, developed by the DC ammeter shunt, overrides the voltage regulator and maintains output current at the preset level. If a fault occurs, resulting in a higher output voltage, it is sensed by the high voltage shutdown circuit, which trips the shunt trip AC breaker turning off the unit.

The power rectifier, which converts the AC voltage from the transformer into DC voltage, consists of silicon diodes arranged in a full-wave circuit. The output of this rectifier is filtered and supplied to the battery and the load through the DC circuit breaker.

FIGURE 3-1: BLOCK DIAGRAM FOR A TYPICAL "ARE" POWER SUPPLY

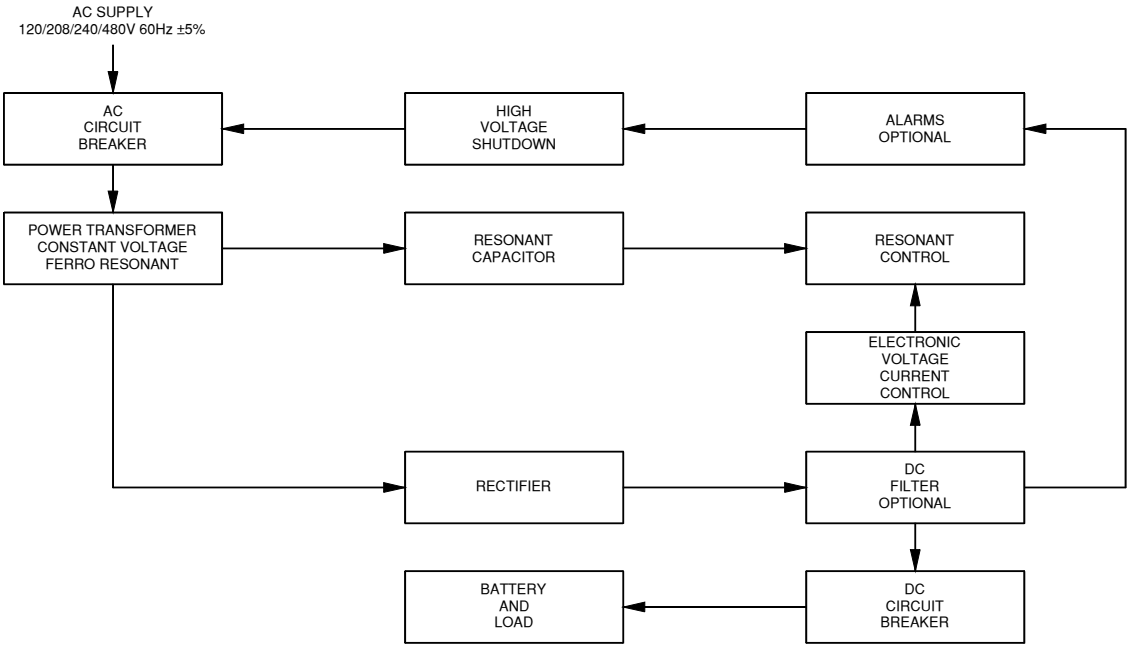

3.2 TROUBLESHOOTING CHART

The following troubleshooting chart is designed to help a qualified technician diagnose the causes of equipment malfunctions. It is intended to be used with the wiring and schematic diagrams. Following this section on troubleshooting is a section on testing or checking of components. For best results, first identify the nature of the problem and then check for each of the possible causes listed beside the symptom.

> **Caution:** For your own safety, before attempting any of these checks, be sure to disconnect both the AC power source and the battery; discharge the filter and resonant capacitors, if required. If a particular check requires AC and /or DC power, follow the specific instructions for that test.

TROUBLESHOOTING CHART

Problem	Possible Causes	Solution
A. AC breaker trips	1. Short circuit in AC power circuit.	a. Inspect primary wiring for possible shorts or grounded connections.
	2. Input connected for lower voltage.	a. Check position of jumpers. Consult connection diagram. b. Measure input voltage.
	3. High voltage shutdown operating.	a. Remove load and check for high voltage.
	4. Input voltage outside ANSI range.	a. Measure input voltage.
	5. Frequency of supply less than 57 Hz.	a. Check input frequency.
	6. Short in transformer winding.	a. Visually inspect power transformer primary coils for signs of overheating.
B. No DC output.	1. AC power outage.	a. Check for AC voltage on both sides of the breaker.
	2. Short circuit in DC power circuit.	a. Inspect secondary power wiring and terminals for shorts or grounded connections. b. Check power rectifier diodes. c. Check for shorted DC filter capacitors.
	3. Open circuit.	a. Check all wiring for open or loose connections.
C. Low DC output voltage. **Note:** Panel VM may be defective. Check voltage at DC output Terminals with a portable meter.	1. Short in resonant circuit.	a. Check triac. b. Check resonant capacitor. c. Check resonant circuit wiring.
	2. Open negative sensing lead.	a. Check wiring for continuity.
	3. Unit in current limit.	a. Adjust current limit potentiometer.
	4. Component failure in control board.	a. Replace control board.
	5. Out of adjustment.	a. Adjust float potentiometer. b. Adjust coarse adjustment on control board.
D. High DC output voltage.	1. Open triac in resonant circuit.	a. Check triac.
	2. Open sensing leads.	a. Check for DC voltage across voltage divider resistor.
	3. Control board failure.	a. Replace control board.
E. DC breaker trips.	1. Battery connection reversed.	a. Check polarity of battery connections.
	2. Short circuit in DC power circuit.	a. Inspect secondary power wiring and terminals for possible shorts or grounded connections. b. Check power rectifier diodes or molded rectifier (and DC filter capacitors).
F. Excessive output current.	1. No current limit.	a. Current limit control improperly set. b. Component failure in control board. Replace. c. Check connections from shunt to control board.

TROUBLESHOOTING CHART continue		
Problem	**Possible Causes**	**Solution**
G. Excessive electrical noise or ripple.	1. Loose filter connections.	a. Check wiring and bus bars for loose or corroded connections.
	2. Open filter capacitor.	a. Check filter capacitors.
	3. Open power diode.	a. Check power diodes.
	4. DC cable routing (excessive noise).	a. Check broken cable ties.
	5. Improperly sized battery.	a. Check battery rating.
H. Oscillations or poor regulation.	1. Loose connection.	a. Inspect circuit boards, connectors, and wiring for loose contacts.
	2. Defective triac.	a. Replace triac.
	3. Component failure in control board.	a. Replace control board.
	4. Open power diode.	a. Check power diodes. Replace as required.
	5. Resonant capacitor not grounded.	a. Check AC capacitor case to ground with ohmmeter.
I. Low output current. **Note:** Panel AM may be open or defective. Check with portable meter.	1. Loose connection.	a. Inspect wiring.
	2. Open power diode.	a. Check power rectifier diodes. Replace as required.
	3. Unit in current limit.	a. Current limit control improperly set. b. Defective control board. Replace.
J. Acoustic noise.	1. Loose laminations.	a. Check air gap areas of power transformer and control reactor with insulated screwdriver.
	2. Cabinet vibration.	a. Check welds and bolted joints.

3.3 CHECKING COMPONENTS

Caution: Before attempting any of the following tests, be sure to disconnect both the AC power and the battery, and discharge filter and resonant capacitors, if required.

NOTE: Replace defective components with exact duplicates only. See Section 4, Parts List.

FUSES: Fuses should be removed and then checked with an ohmmeter. A good fuse will show zero resistance; and open fuse will show infinite resistance. Any ohmmeter scale can be used when checking fuses.

DIODES: First, remove at least one connection to the diode, and then check using an ohmmeter to measure resistance, first cathode to anode and then anode to cathode. A good diode will show low resistance one way and very high resistance the other way. A shorted diode will show no or very low resistance both ways. An open diode will show a very high resistance both ways. Suggested scales for these checks are either X10 or X100.

CAPACITORS: First, isolate capacitors and then check with an ohmmeter. Proper scale range will vary as to type of meter and capacitor size. Start with highest range and work down. Reverse leads each time. If the capacitor is good, it will show a deflection towards zero resistance initially, then a steady increase toward infinite resistance. If, however, the capacitor is shorted, it will show zero resistance. If the capacitor is open, it will read infinite resistance.

RESONANT TRIAC: Remove one triac connection, being careful not to remove gate wire and check with an ohmmeter. A good triac will indicate high resistance in both directions. To check for turn on of the triac, do the following: with one lead still disconnect, connect the positive lead of an analog ohmmeter to the anode of the triac and the negative lead to the cathode. The triac should read open or high resistance. Connect the gate to the anode with a jumper. A low resistance reading indicates that the triac is turning on.

4. DRAWINGS

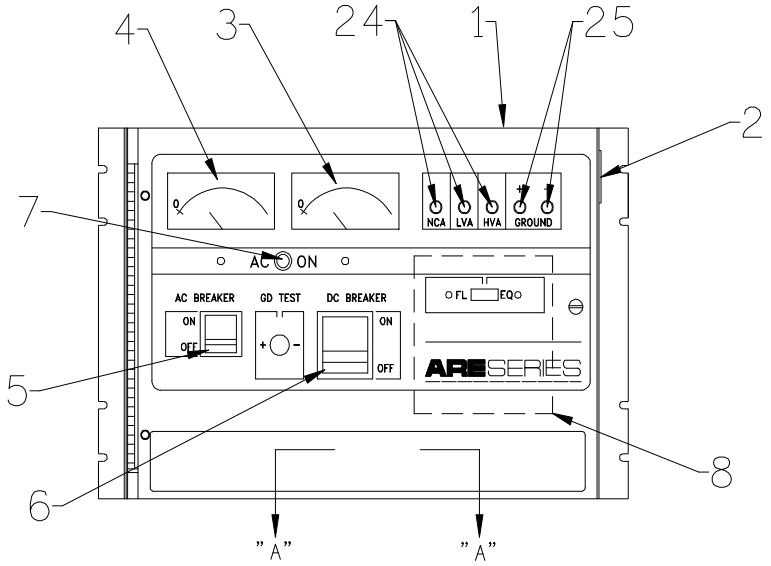

SECTION – "A" – "A"
TS4 IS ONLY PROVIDED WHEN
HIGH/LOW OR GROUND DETECTION
ALARMS ARE ORDERED.

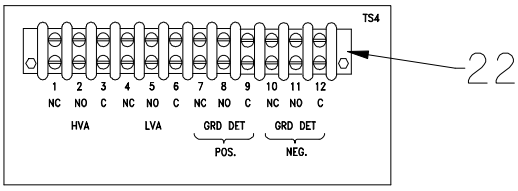

SECTION – "A – A"

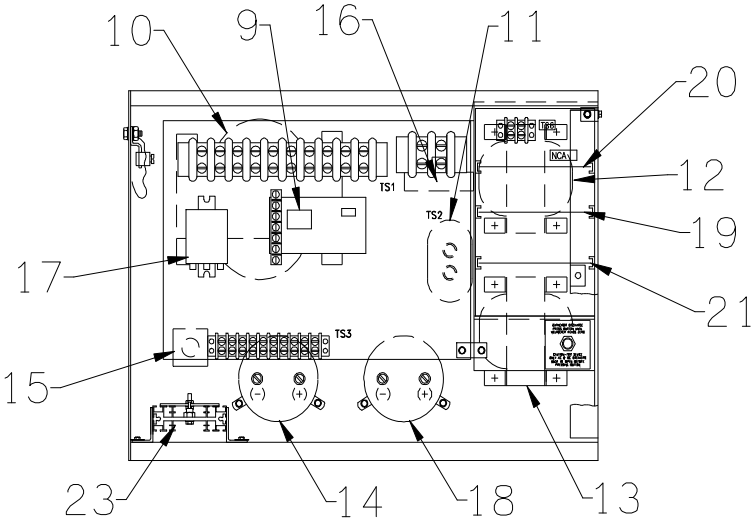

FIGURE 4-1: MBC-3410B CABINET ASSEMBLY – 12 ¼" CABINET

Note: May be one to three capacitors in filter circuit. Items 14 and 18.

Please refer to figure 4-1.

PARTS LIST
MODEL ARE24AC6E

ITEM	SCHEMATIC LEGEND	PART NUMBER	QTY.	DESCRIPTION
1	-	MBC-3410B	1	Cabinet Assembly: 17" W x 12 ¼" H x 14" D
2	-	-	1	Data Name Plate
*3	AM	JM00291	1	Ammeter 0-10 ADC; 3 ½"; 2%; Internal Shunt; Yokogawa 255300MTMT w/opt. 2
4	VM	JM00239	1	Voltmeter 0-50 VDC; 3 ½"; 2%; Yokogawa 255320NTNT w/mtg. opt. 2
5	ACB	JR00575	1	AC Circuit Breaker; 2P; 5A; 240 VAC w/ 120 VAC relay trip; Airpax UPL
6	DCB	JR00209	1	DC Circuit Breaker; 2P; 10A; Cutler Hammer (West.) Type QC 2010
7	PL	JL00592	1	Pilot light, 115 VAC, Amber, Leecraft 32R2113T or IDI 1050QC3
*8	CBA	MBC04226	1	Control Board;
9	HVSD	MBC03970A-24	1	High voltage shutdown board;
10	PXF	T01592	1	Power Transformer;
11	RC	JC00225	1	Resonant Capacitor, 5 uF, 660 VAC; Cornell-Dubilier KKSM66U505M32-3
12	RR	T01609	1	Resonant Reactor;
13	FC	T00343	1	Filter Choke;
14	C1	JC00148	1	Filter Capacitor 14,000 uF, 75 VDC, Cornell-Dubilier DCM143U075BE2B
*15	D1, D2	JS00485	1	Rectifier Assembly, 25A, 600V, Diodes Inc. MP2506 or GBPC2506B
*16	Triac	JS00683	1	Triac, 25A, 600V, Powerex SC260M
17	ACF	JR00817	1	AC Power Failure Alarm Relay, 3PDT, 120 VAC, 10A, P&B KUP14A55-120
18	C2	JC00148	1	Filter Capacitor, 14,000 uf, 75 VDC, Cornell-Dubilier DCM143U075BE2B
OPTIONAL EQUIPMENT				
19	H/LVA	MBC03930-24	1	High/Low Voltage Alarm Relay;
20	NCA/LS	MBC04037-24	1	No Charge Alarm/Load Sharing;
21	GDA	MBC04031-24	1	Ground Detection Relay;
22	TS-4		1	Customer Connection Panel
23		JS00786	1	Blocking Diode;
24		JL00698	1 – 3	Alarm Light-Red; 28 VDC, Leecraft 45RNG18-2311T3
25		JL00699	2	Alarm Light-Green; 28VDC, Leecraft 45RNG18-2312T3

*Recommended Spare Parts

PARTS LIST
MODEL ARE24AC12E

ITEM	SCHEMATIC LEGEND	PART NUMBER	QTY.	DESCRIPTION
1	-	MBC-3410B	1	Cabinet Assembly: 17" W x 12 ¼" H x 14" D
2	-	-	1	Data Name Plate
*3	AM	JM00246	1	Ammeter 0-20 ADC; 3 ½"; 2%; Internal Shunt; Yokogawa 255300NGNG w/opt. 2
4	VM	JM00239	1	Voltmeter 0-50 VDC; 3 ½"; 2%; Yokogawa 255320NTNT w/mtg. opt. 2
5	ACB	JR00575	1	AC Circuit Breaker; 2P; 5A; 240 VAC w/ 120 VAC relay trip; Airpax UPL
6	DCB	JR00208	1	DC Circuit Breaker; 2P; 10A; Cutler Hammer (West.) Type QC 2010
7	PL	JL00592	1	Pilot light, 115 VAC, Amber, Leecraft 32R2113T or IDI 1050QC3
*8	CBA	MBC04226	1	Control Board;
9	HVSD	MBC03970A-24	1	High voltage shutdown board;
10	PXF	T01593	1	Power Transformer;
11	RC	JC00011	1	Resonant Capacitor, 10 uF, 660 VAC; Cornell-Dubilier KTSM66U106M32-3
12	RR	T01612	1	Resonant Reactor;
13	FC	T00343	1	Filter Choke;
14	C1	JC00134	1	Filter Capacitor 32,000 uF, 40 VDC, Cornell-Dubilier 101323U040DC2B
*15	D1, D2	JS00485	1	Rectifier Assembly, 25A, 600V, Diodes Inc. MP2506 or GBPC2506B
*16	Triac	JS00683	1	Triac, 25A, 600V, Powerex SC260M
17	ACF	JR00817	1	AC Power Failure Alarm Relay, 3PDT, 120 VAC, 10A, P&B KUP14A55-120
18	C2	JC00134	1	Filter Capacitor, 32,000 uf, 40 VDC, Cornell-Dubilier 101323U040DC2B
OPTIONAL EQUIPMENT				
19	H/LVA	MBC03930-24	1	High/Low Voltage Alarm Relay;
20	NCA/LS	MBC04037-24	1	No Charge Alarm/Load Sharing;
21	GDA	MBC04031-24	1	Ground Detection Relay;
22	TS-4		1	Customer Connection Panel
23		JS00786	1	Blocking Diode;
24		JL00698	1 – 3	Alarm Light-Red; 28 VDC, Leecraft 45RNG18-2311T3
25		JL00699	2	Alarm Light-Green; 28VDC, Leecraft 45RNG18-2312T3

*Recommended Spare Parts

Please refer to figure 4-1.

PARTS LIST
MODEL ARE48AC6E

ITEM	SCHEMATIC LEGEND	PART NUMBER	QTY.	DESCRIPTION
1	-	MBC03410B	1	Cabinet Assembly: 17" W x 12 ¼" H x 14" D
2	-	-	1	Data Name Plate
*3	AM	JM00291	1	Ammeter 0-10 ADC; 3 ½"; 2%; Internal Shunt; Yokogawa 255300MTM w/opt. 2
4	VM	JM00240	1	Voltmeter 0-80 VDC; 3 ½"; 2%; Yokogawa 255320PDPD w/mtg. opt. 2
5	ACB	JR00575	1	AC Circuit Breaker; 2P; 5A; 240 VAC w/ 120 VAC relay trip; Airpax UPL
6	DCB	JR00209	1	DC Circuit Breaker; 2P; 10A; Cutler Hammer (West.) Type QC 2010
7	PL	JL00592	1	Pilot light, 115 VAC, Amber, Leecraft 32R2113T or IDI 1050QC3
*8	CBA	MBC04226	1	Control Board;
9	HVSD	MBC03970A-48	1	High voltage shutdown board;
10	PXF	T01595	1	Power Transformer;
11	RC	JC00227	1	Resonant Capacitor, 8 uF, 660 VAC, Cornell-Dubilier KKMP66U805M3E-3)
12	RR	T01612	1	Resonant Reactor;
13	FC	T00343	1	Filter Choke;
14	C1	JC00148	1	Filter Capacitor 14,000 uF, 75 VDC, Cornell-Dubilier DCM143U075BE2B
*15	D1, D2	JS00485	1	Rectifier Assembly, 25A, 600V, , Diodes Inc. MP2506 or GBPC2506B
*16	Triac	JS00683	1	Triac, 25A, 600V, Powerex SC250M
17	ACF	JR00817	1	AC Power Failure Alarm Relay, 3PDT, 120 VAC, 10A, P&B KUP14A55-120
18	C2	JC00148	1	Filter Capacitor, 14,000 uf, 75 VDC, Cornell-Dubilier DCM143U075BE2B
OPTIONAL EQUIPMENT				
19	H/LVA	MBC03930-48	1	High/Low Voltage Alarm Relay;
20	NCA/LS	MBC04037-48	1	No Charge Alarm/Load Sharing;
21	GDA	MBC04031-48	1	Ground Detection Relay;
22	TS-4		1	Customer Connection Panel
23		JS00786	1	Blocking Diode;
24		JL00698	1 – 3	Alarm Light-Red; 28 VDC, Leecraft 45RNG18-2311T3
25		JL00699	2	Alarm Light-Green; 28VDC, Leecraft 45RNG18-2312T3

*Recommended Spare Parts

PARTS LIST
MODEL ARE48AC12E

ITEM	SCHEMATIC LEGEND	PART NUMBER	QTY.	DESCRIPTION
1	-	MBC03410B	1	Cabinet Assembly: 17" W x 12 ¼" H x 14" D
2	-	-	1	Data Name Plate
*3	AM	JM00246	1	Ammeter 0-20 ADC; 3 ½"; 2%; Internal Shunt; Yokogawa 255300NGNG w/opt. 2
4	VM	JM00240	1	Voltmeter 0-80 VDC; 3 ½"; 2%; Yokogawa 255320PDPD w/mtg. opt. 2
5	ACB	JR00543	1	AC Circuit Breaker; 2P; 10A; 240 VAC w/ 120 VAC relay trip; Airpax UPL
6	DCB	JR00208	1	DC Circuit Breaker; 2P; 20A; Cutler Hammer (West.) Type QC 2020
7	PL	JL00592	1	Pilot light, 115 VAC, Amber, Leecraft 32R2113T or IDI 1050QC3
*8	CBA	MBC04226	1	Control Board;
9	HVSD	MBC03970A-48	1	High voltage shutdown board;
10	PXF	T01651	1	Power Transformer;
11	RC	JC00011	1	Resonant Capacitor, 10 uF, 660 VAC; Cornell-Dubilier KTSM66U106M32-3
12	RR	T01613	1	Resonant Reactor;
13	FC	T00343	1	Filter Choke;
14	C1	JC00129	1	Filter Capacitor 27,000 uF, 75 VDC, Cornell-Dubilier DCM273U075DC2B
*15	D1, D2	JS00485	1	Rectifier Assembly, 25A, 600V, , Diodes Inc. MP2506 or GBPC2506B
*16	Triac	JS00683	1	Triac, 25A, 600V, Powerex SC260M
17	ACF	JR00817	1	AC Power Failure Alarm Relay, 3PDT, 120 VAC, 10A, P&B KUP14A55-120
18	C2	JC00129	1	Filter Capacitor, 27,000 uf, 75 VDC, Cornell-Dubilier DCM273U075DC2B
OPTIONAL EQUIPMENT				
19	H/LVA	MBC03930-48	1	High/Low Voltage Alarm Relay;
20	NCA/LS	MBC04037-48	1	No Charge Alarm/Load Sharing;
21	GDA	MBC04031-48	1	Ground Detection Relay;
22	TS-4		1	Customer Connection Panel (Optional);
23		JS00786	1	Blocking Diode;
24		JL00698	1 – 3	Alarm Light-Red; 28 VDC, Leecraft 45RNG18-2311T3
25		JL00699	2	Alarm Light-Green; 28VDC, Leecraft 45RNG18-2312T3

*Recommended Spare Parts

Please refer to figure 4-1.

PARTS LIST
MODEL ARE130AC6F

ITEM	SCHEMATIC LEGEND	PART NUMBER	QTY.	DESCRIPTION
1	-	MBC-3410B	1	Cabinet Assembly: 17" W x 12 ¼" H x 14" D
2	-	-	1	Data Name Plate
*3	AM	JM00291	1	Ammeter 0-10 ADC; 3 ¼ "; 2%; Internal Shunt; Yokogawa 255300MTM w/opt. 2
4	VM	JM00281	1	Voltmeter 0-200 VDC; 3 ½"; 2%; Yokogawa 255320RLRL w/mtg. opt. 2
5	ACB	JR00543	1	AC Circuit Breaker; 2P; 10A; 240 VAC w/ 120 VAC relay trip; Airpax UPL
6	DCB	JR00209	1	DC Circuit Breaker; 2P; 10A; Cutler Hammer (West.) Type QC 2010
7	PL	JL00592	1	Pilot light, 115 VAC, Amber, Leecraft 32R2113T or IDI 1050QC3
*8	CBA	MBC03952SA	1	Control Board;
9	HVSD	MBC03970A-130	1	High voltage shutdown board;
10	PXF	T01585	1	Power Transformer;
11	RC	JC00032	1	Resonant Capacitor, 12 uF, 660 VAC; Cornell-Dubilier KTS M66U126M32-3
12	RR	T01602	1	Resonant Reactor;
13	FC	T00343	1	Filter Choke;
14	C1	JC00144	1	Filter Capacitor 7,400 uF, 200 VDC, Cornell-Dubilier DCM742T200DF2B
*15	D1, D2	JS00485	1	Rectifier Assembly, 25A, 600V, Diodes Inc. MP2506 or GBPC2506B
*16	Triac	JS00683	1	Triac, 25A, 600V, Powerex SC260M
17	ACF	JR00817	1	AC Power Failure Alarm Relay, 3PDT, 120 VAC, 10A, P&B KUP14A55-120
18	C2	JC00144	1	Filter Capacitor, 7,400 uf, 200 VDC, Cornell-Dubilier DCM742T200DF2B
OPTIONAL EQUIPMENT				
19	H/LVA	MBC03930-130	1	High/Low Voltage Alarm Relay;
20	NCA/LS	MBC04037-130	1	No Charge Alarm/Load Sharing;
21	GDA	MBC04031-130	1	Ground Detection Relay;
22	TS-4		1	Customer Connection Panel
23		JS00786	1	Blocking Diode;
24		JL00696	1 – 3	Alarm Light-Red; 125 VDC, Leecraft 45RN-2311T3
25		JL00697	2	Alarm Light-Green; 125VDC, Leecraft 45RN-2312T3

*Recommended Spare Parts

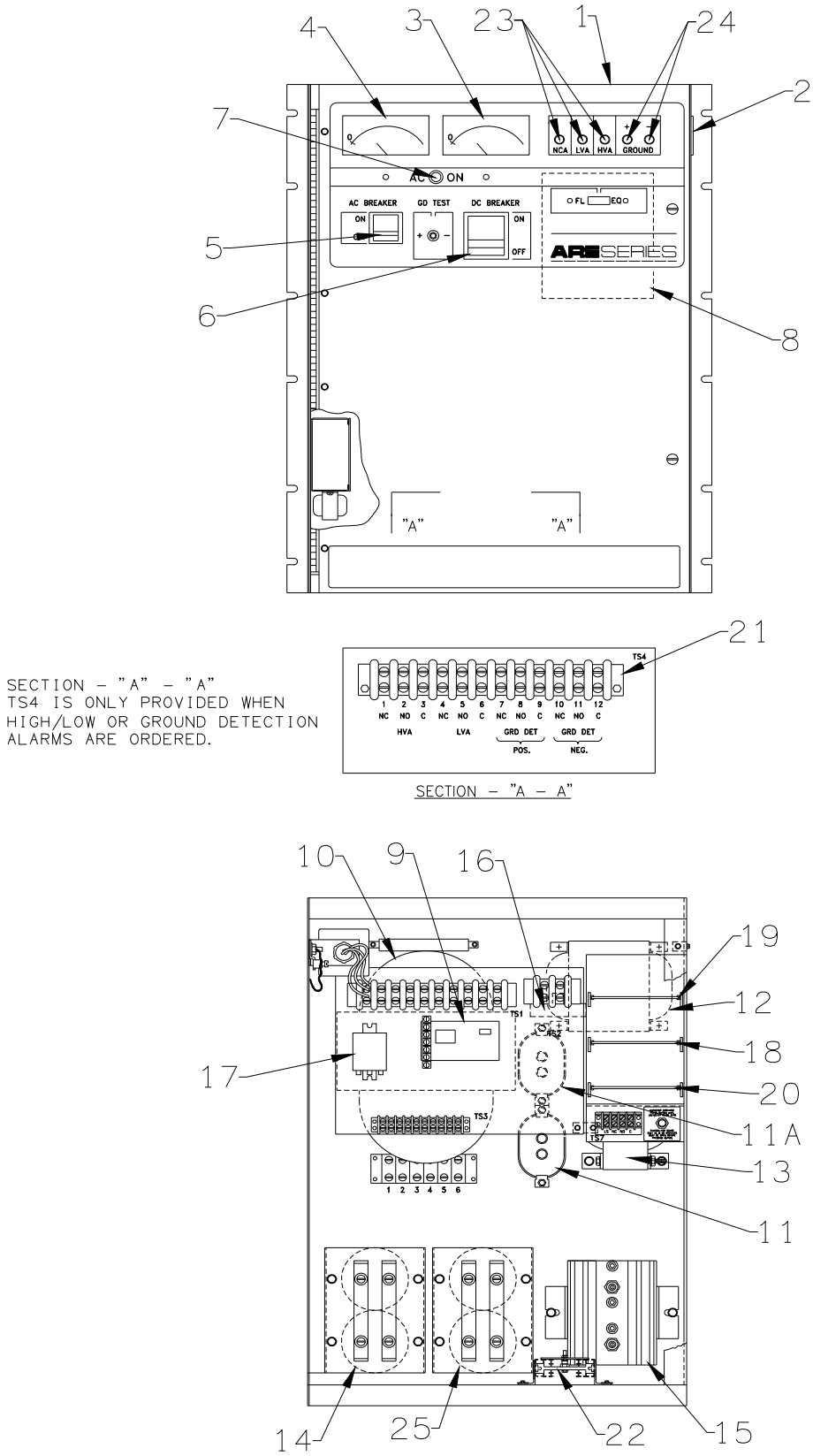

FIGURE 4-2: MBC-3420B CABINET ASSEMBLY – 24 ½" CABINET
(120/208/240 VOLT INPUT)

Note: May be three to four capacitors n filter circuit. Items 14 and 25.

Please refer to figure 4-2.

PARTS LIST
MODEL ARE130AC12F

ITEM	SCHEMATIC LEGEND	PART NUMBER	QTY.	DESCRIPTION
1	-	MBC-3420B	1	Cabinet Assembly: 17" W x 24 1/2" H x 14" D;
2	-	-	1	Data Name Plate
*3	AM	JM00246	1	Ammeter 0-20 ADC; 3 ½"; 2%; Internal Shunt; Yokogawa 255300NGNG w/opt. 2
4	VM	JM00281	1	Voltmeter 0-200 VDC; 3 ½"; 2%; Yokogawa 255320RLRL w/mtg. opt. 2
5	ACB	JR00544	1	AC Circuit Breaker; 2P; 15A; 240 VAC w/ 120 VAC relay trip; Airpax UPL
6	DCB	JR00208	1	DC Circuit Breaker; 2P; 20A; Cutler Hammer (West.) Type QC 2020
7	PL	JL00592	1	Pilot light, 115 VAC, Amber, Leecraft 32R2113T or IDI 1050QC3
*8	CBA	MBC03952SA	1	Control Board;
9	HVSD	MBC03970A-130	1	High voltage shutdown board;
10	PXF	T01586	1	Power Transformer;
11	RC	JC00062	1	Resonant Capacitor, 15 uF, 660 VAC; Cornell-Dubilier KTSM66U156M3E-3
11A	RC	JC00226	1	Resonant Capacitor, 6 uF , 660 VAC; Cornell-Dubilier KKSM66U605M3E-3
12	RR	T01604	1	Resonant Reactor;
13	FC	T01733	1	Filter Choke;
14	C1	JC00144	2	Filter Capacitor 7,400 uF, 200 VDC, Cornell-Dubilier DCM742T200DF2B
*15	D1, D2	JS00485	1	Rectifier Assembly, 25A, 600V, Diodes Inc. MP2506 or GBPC2506B
*16	TRIAC	JS00683	1	Triac, 25A, 600V, POWEREX SC260M
17	ACF	JR00817	1	AC Power Failure Alarm Relay, 3PDT, 120 VAC, 10A, P&B KUP14A55-120
25	C2	JC00144	1	Filter Capacitor, 7,400 uf, 200 VDC, Cornell-Dubilier DCM742T200DF2B
OPTIONAL EQUIPMENT				
18	H-LVA	MBC03930-130	1	High/Low Voltage Alarm Relay;
19	NCA/LS	MBC04037-130	1	No Charge Alarm/Load Sharing;
20	GDA	MBC04031-130	1	Ground Detection Relay;
21	TS-4		1	Customer Connection Panel,
22		JS00786	1	Blocking Diode;
23		JL00696	1 – 3	Alarm Light-Red; 125 VDC, Leecraft 45RN-2311T3
24		JL00697	2	Alarm Light-Green; 125VDC, Leecraft 45RN-2312T3

*Recommended Spare Parts

PARTS LIST
MODEL ARE130AC16F

ITEM	SCHEMATIC LEGEND	PART NUMBER	QTY.	DESCRIPTION
1	-	MBC-3420B	1	Cabinet Assembly: 17" W x 24 ½" H x 14" D
2	-	-	1	Data Name Plate
*3	AM	JM00246	1	Ammeter 0-20 ADC; 3 ½ "; 2%; Internal Shunt; Yokogawa 255300NGNG w/opt. 2
4	VM	JM00281	1	Voltmeter 0-200 VDC; 3 ½"; 2%; Yokogawa 255320RLRL w/mtg. opt. 2
5	ACB	JR00544	1	AC Circuit Breaker; 2P; 15A; 240 VAC w/ 120 VAC relay trip; Airpax UPL
6	DCB	JR00208	1	DC Circuit Breaker; 2P; 20A; Cutler Hammer (West.) Type QC 2020
7	PL	JL00592	1	Pilot light, 115 VAC, Amber, Leecraft 32R2113T or IDI 1050QC3
*8	CBA	MBC03952SA	1	Control Board;
9	HVSD	MBC03970A-130	1	High voltage shutdown board;
10	PXF	T01587	1	Power Transformer;
11	RC	JC00118	1	Resonant Capacitor, 25 uF, 660 VAC; Cornell-Dubilier KBSM66U256M3E-3
12	RR	T01604	1	Resonant Reactor;
13	FC	T0250	1	Filter Choke;
14	C1	JC00144	2	Filter Capacitor 7,400 uF, 200 VDC, Cornell-Dubilier DCM742T200DF2B
15	D1, D2	JS00698	1	Rectifier Assembly, 70A, 600V,
*15A	D1, D2	JS00594	2	Diode, 85A, 600V, Forward, Microsemi S-3760 DS175-08BX8 or Edal F6K3
*16	Triac	JS00683	1	Triac, 25A, 600V, POWEREX SC260M
17	ACF	JR00817	1	AC Power Failure Alarm Relay, 3PDT, 120 VAC, 10A, P&B KUP14A55-120
25	C2	JC00144	2	Filter Capacitor, 7,400 uf, 200 VDC, Cornell-Dubilier DCM742T200DF2B
OPTIONAL EQUIPMENT				
18	H/LVA	MBC03930-130	1	High/Low Voltage Alarm Relay;
19	NCA/LS	MBC04037-130	1	No Charge Alarm/Load Sharing;
20	GDA	MBC04031-130	1	Ground Detection Relay;
21	TS-4		1	Customer Connection Panel
22		JS00667	1	Blocking Diode;
23		JL00696	1 – 3	Alarm Light-Red; 125 VDC, Leecraft 45RN-2311T3
24		JL00697	2	Alarm Light-Green; 125VDC, Leecraft 45RN-2312T3

*Recommended Spare Parts

Please refer to figure 4-2.

PARTS LIST
MODEL ARE130CE12F

ITEM	SCHEMATIC LEGEND	PART NUMBER	QTY.	DESCRIPTION
1	-	MBC-3420B	1	Cabinet Assembly: 17" W x 24 ½" H x 14" D
2	-	-	1	Data Name Plate
*3	AM	JM00246	1	Ammeter 0-20 ADC; 3 ½"; 2%; Internal Shunt; Yokogawa 255300NGNG w/mtg. opt. 2
4	VM	JM00281	1	Voltmeter 0-200 VDC; 3 ½"; 2%; Yokogawa 255320RLRL w/mtg. opt. 2
5	ACB(208/240)	JR00805	1	AC Circuit Breaker; 2P; 20A; 480 VAC w/120 VAC, shunt trip, Heinemann CD2-A3-A16-AB-20-480-2
5	ACB(480)	JR00761	1	AC Circuit Breaker; 2P; 10A; 480 VAC w/120 VAC, relay trip, Heinemann CD2-A3-A16-AB-10-480-2
6	DCB	JR00208	1	DC Circuit Breaker; 2P; 20A; Cutler Hammer (West.) Type QC 2020
7	PL	JL00592	1	Pilot light, 115 VAC, Amber, Leecraft 32R2113T or IDI 1050QC3
*8	CBA	MBC03952SA	1	Control Board;
9	HVSD	MBC03970A-130	1	High voltage shutdown board;
10	PXF	T01914	1	Power Transformer;
11	RC	JC00062	1	Resonant Capacitor, 15 uF, 660 VAC; Cornell-Dubilier KTSM66U156M3E-36F
11A	RC	JC00224	1	Resonant Capacitor, 4 uF, 660 VAC; Cornell-Dubilier KKSM66U405M2B-3
12	RR	T01603	1	Resonant Reactor;
13	FC	T01733	1	Filter Choke;
14	C1	JC00144	2	Filter Capacitor 7,400 uF, 200 VDC, Cornell-Dubilier DCM742T200DF2B
*15	D1, D2	JS00485	1	Rectifier Assembly, 25A, 600V, Diodes Inc. MP2506 or GBPC2506B
*16	Triac	JS00683	1	Triac, 25A, 600V, Powerex SC260M
17	ACF	JR00817	1	AC Power Failure Alarm Relay, 3PDT, 120 VAC, 10A, P&B KUP14A55-120
25	C2	JC00144	1	Filter Capacitor, 7,400 uf, 200 VDC, Cornell-Dubilier DCM742T200DF2B
26	CXF	JT00258	1	Control Transformer, Westinghouse 1F0890
29	CF	JL00085	1	Fuse 250V, 1A, Bussman AGC-1
OPTIONAL EQUIPMENT				
18	H/LVA	MBC03930-130	1	High/Low Voltage Alarm Relay;
19	NCA/LS	MBC04037-130	1	No Charge Alarm/Load Sharing;
20	GDA	MBC04031-130	1	Ground Detection Relay;
21	TS-4		1	Customer Connection Panel;
22		JS00786	1	Blocking Diode;
23		JL00696	1 – 3	Alarm Light-Red; 125 VDC, Leecraft 45RN-2311T3
24		JL00697	2	Alarm Light-Green; 125VDC, Leecraft 45RN-2312T3

*Recommended Spare Parts

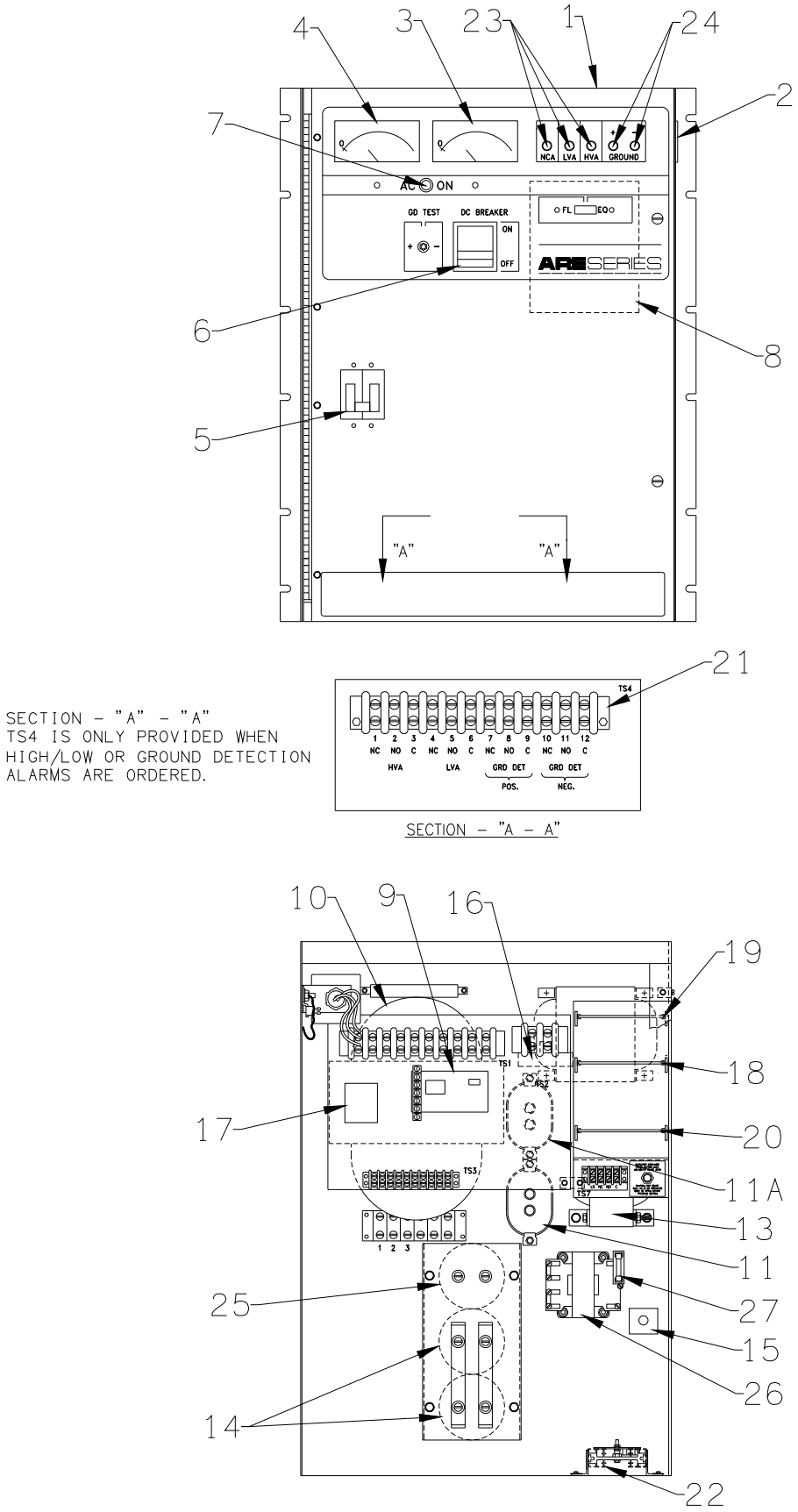

FIGURE 4-3: MBC-3420B CABINET ASSEMBLY – 24 ½" CABINET
208/240/480 VOLT INPUT)

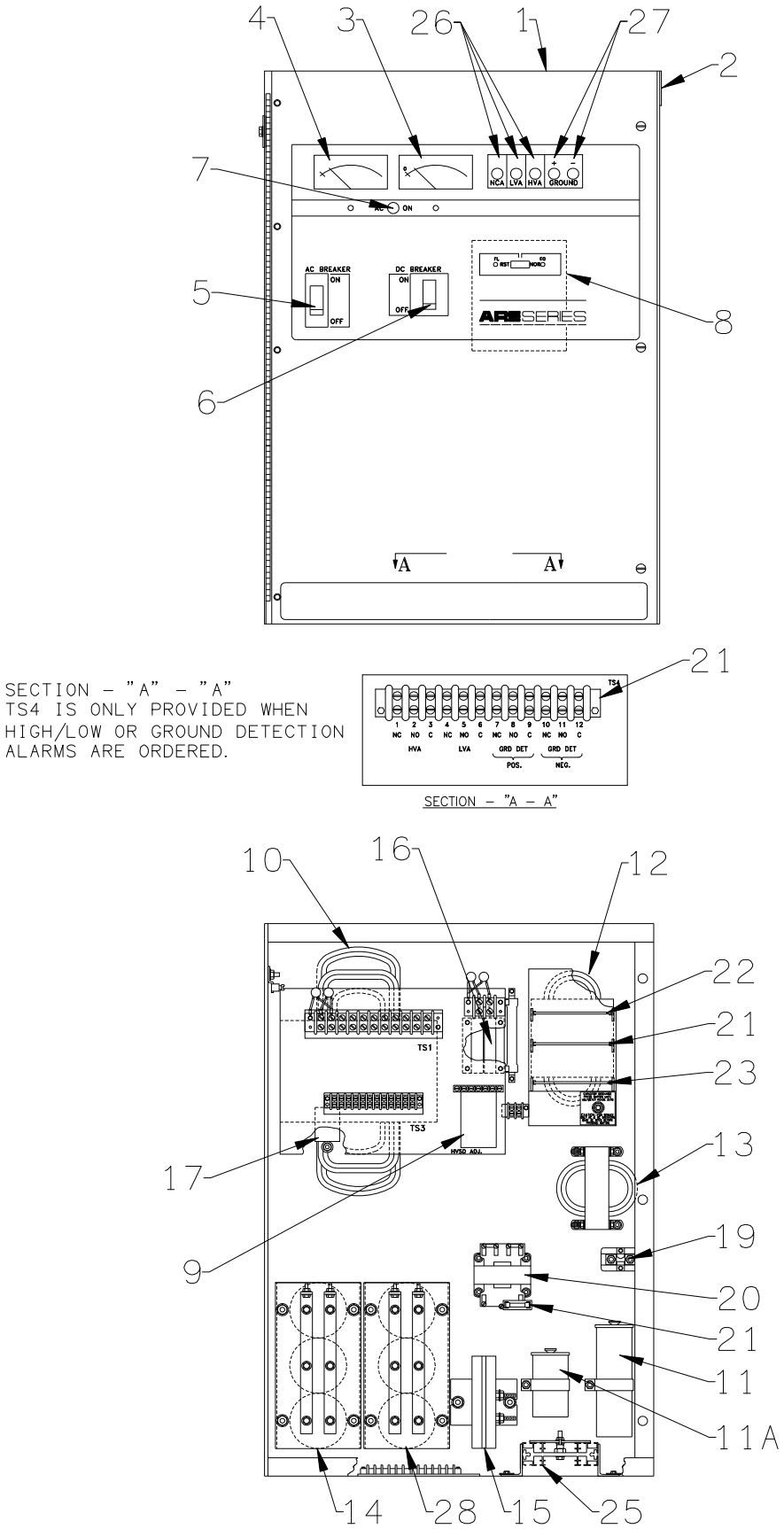

FIGURE 4-4: MBC-3700B CABINET ASSEMBLY – 30" CABINET

Note: May be six to ten capacitors in filter circuit. Items 14 and 28.

Please refer to Figures 4-3 or 4-4

PARTS LIST
MODEL ARE130CE25F

ITEM	SCHEMATIC LEGEND	PART NUMBER	QTY.	DESCRIPTION
1	-	MBC-3700B	1	Cabinet Assembly: 20 ½" W x 30" H x 15" D
2	-	-	1	Data Name Plate
3	AM	JM00242	1	Ammeter 0-50 ADC; 3 ½"; 2%; 50MV shunt rated; Yokogawa 255324ECNT w/mtg. opt. 2
4	VM	JM00281	1	Voltmeter 0-200 VDC; 3 ½"; 2%; Yokogawa 255320RLRL w/mtg. opt. 2
5A	ACB	JR00594	1	AC Circuit Breaker; 2P; 30A; 208VAC w/120 VAC shunt trip; Cutler Hammer (West.) EHD 2030
5B	ACB	JR00601	1	AC Circuit Breaker; 2P; 25A; 240 VAC w/120 VAC shunt trip; Cutler Hammer (West.) EHD 2025
5C	ACB	JR00599	1	AC Circuit Breaker; 2P; 15A; 480 VAC w/120 VAC, shunt trip; Cutler Hammer (West.) EHD 2015
6	DCB	JR00213	1	DC Circuit Breaker; 2P; 40A; Cutler Hammer (West.) Type QC 2040
7	PL	JL00592	1	Pilot light, 115 VAC, Amber, Leecraft 32R2113T or IDI 1050QC3
*8	CBA	MBC03952S	1	Control Board;
9	HVSD	MBC03970A-130	1	High voltage shutdown board;
10	PXF	T01588	1	Power Transformer;
11	RC	JC00117	1	Resonant Capacitor, 30 uF, 660 VAC; Cornell-Dubilier KBSM66U306M3E-3
11A	RC	JC00062	1	Resonant Capacitor, 15 uF, 660 VAC; Cornell-Dubilier KTSM66U156M3E-3
12	RR	T01605	1	Resonant Reactor;
13	FC	T00250	1	Filter Choke;
14	C1	JC00144	3	Filter Capacitor 7,400 uF, 200 VDC, Cornell-Dubilier DCM742T200DF2B
15	D1, D2	JS00702	1	Rectifier Assembly, 70A, 600V,
*15A	D1, D2	JS00594	2	Diode, 85A, 600V, Forward, Microsemi S-3760 DS175-08BX8 or Edal F6K3 or Int. Rectifier 70HF60A
*16	TRIAC	JS00684	1	Triac, 40A, 600V, Powerex SC265M
17	ACF	JR00817	1	AC Power Failure Alarm Relay, 3PDT, 120 VAC, 10A, P&B KUP14A55-120
19	AS	JM00248	1	Ammeter Shunt, 50A, 50MV, RAM MSA-500
20	CXF	JT00258	1	Control Transformer, Westinghouse 1F0890
28	C2	JC00144	3	Filter Capacitor, 7,400 uf, 200 VDC, Cornell-Dubilier DCM742T200DF2B
*29	CF	JL00085	1	Fuse 1A, 250 VAC, Bussman AGC-1
OPTIONAL EQUIPMENT See ARE130AC25F				

*Recommended Spare Parts

Please refer to Figures 4-3 or 4-4

PARTS LIST
MODEL ARE130AC25F

ITEM	SCHEMATIC LEGEND	PART NUMBER	QTY.	DESCRIPTION
1	-	MBC-3700B	1	Cabinet Assembly: 20 ½" W x 30 ½" H x 15" D
2	-	-	1	Data Name Plate
3	AM	JM00242	1	Ammeter 0-50 ADC; 3 ½"; 2%; 50MV shunt rated; Yokogawa 255324ECNT w/mtg. opt. 2
4	VM	JM00281	1	Voltmeter 0-200 VDC; 3 ½"; 2%; Yokogawa 255320RLRL w/mtg. opt. 2
5A	ACB	JR00597	1	AC Circuit Breaker; 2P; 50A; 120VAC w/120 VAC shunt trip; Cutler Hammer (West.) EHD 2050
5B	ACB	JR00594	1	AC Circuit Breaker; 2P; 30A; 208 VAC w/120 VAC shunt trip, Cutler Hammer (West.) EHD 2030
5C	ACB	JR00601	1	AC Circuit Breaker; 2P; 25A; 240 VAC w/120 VAC, shunt trip; Cutler Hammer (West.) EHD 2025
6	DCB	JR00213	1	DC Circuit Breaker; 2P; 40A; Cutler Hammer (West.) Type QC 2040
7	PL	JL00592	1	Pilot light, 115 VAC, Amber, Leecraft 32R2113T or IDI 1050QC3
*8	CBA	MBC03952S	1	Control Board;
9	HVSD	MBC03970A-130	1	High voltage shutdown board;
10	PXF	T01681	1	Power Transformer;
11	RC	JC00117	1	Resonant Capacitor, 30 uF, 660 VAC; Cornell-Dubilier KBSM66U306M3E-3
11A	RC	JC00062	1	Resonant Capacitor, 15 uF, 660 VAC; Cornell-Dubilier KTSM66U156M3E-3
12	RR	T01605	1	Resonant Reactor;
13	FC	T00250	1	Filter Choke;
14	C1	JC00144	3	Filter Capacitor 7,400 uF, 200 VDC, Cornell-Dubilier DCM742T200DF2B
15	D1, D2	JS00702	1	Rectifier Assembly, 70A, 600V,
*15A	D1, D2	JS00594	2	Diode, 85A, 600V, Forward, Microsemi S-3760 DS175-08BX8 or Edal F6K3 or Int. Rectifier 70HF60A
*16	TRIAC	JS00684	1	Triac, 40A, 600V, Powerex SC265M
17	ACF	JR00817	1	AC Power Failure Alarm Relay, 3PDT, 120 VAC, 10A, P&B KUP14A55-120
19	AS	JM00248	1	Ammeter Shunt, 50A, 50MV, RAM MSA-500 or C.S.I. LA-50-50
20			0	
28	C2	JC00144	3	Filter Capacitor, 7,400 uf, 200 VDC, Cornell-Dubilier DCM742T200DF2B

*Recommended Spare Parts

MODEL ARE130AC25F
OPTIONAL EQUIPMENT

ITEM	SCHEMATIC LEGEND	PART NUMBER	QTY.	DESCRIPTION
21	H/LVA	MBC03930-130	1	High/Low Voltage Alarm Relay;
22	NCA/LS	MBC04037-130	1	No Charge Alarm/Load Sharing;
23	GDA	MBC04031-130	1	Ground Detection Relay;
24	TS-4		1	Customer Connection Panel;
25		JS00663	1	Blocking Diode; (not shown)
26		JL00696	1 – 3	Alarm Light-Red; 125 VDC, Leecraft 45RN-2311T3
27		JL00697	2	Alarm Light-Green; 125VDC, Leecraft 45RN-2312T3

*Recommended Spare Parts

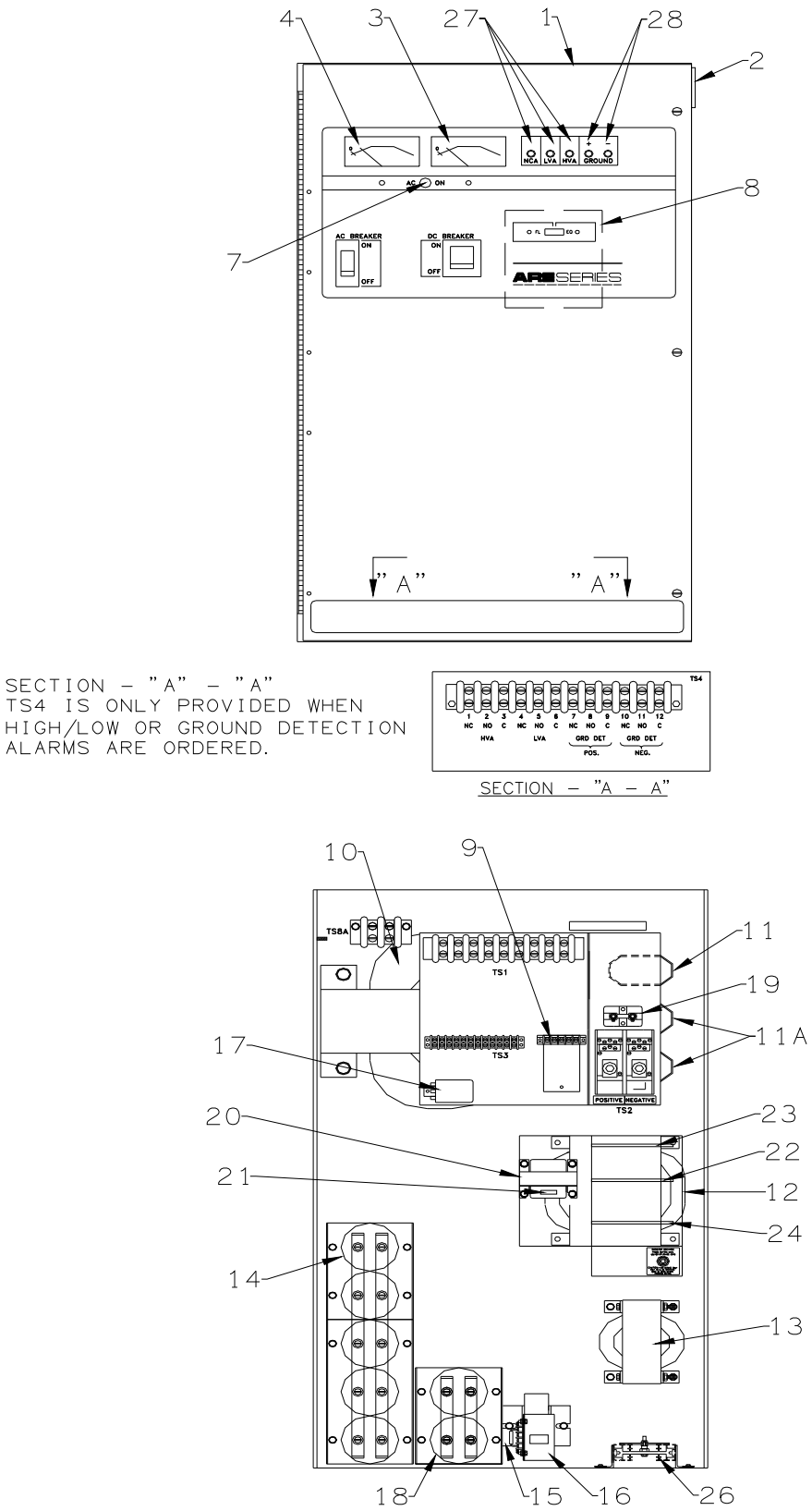

FIGURE 4-5: MBC-3716B CABINET ASSEMBLY – 36" CABINET

Note: May be five to ten capacitors in filter circuit. Items 14 and 27.

Please refer to Figure 4-5.

PARTS LIST
MODEL ARE130CE35F

ITEM	SCHEMATIC LEGEND	PART NUMBER	QTY.	DESCRIPTION
1	-	MBC-3716B	1	Cabinet Assembly: 20 ½" W x 36" H x 15" D
2	-	-	1	Data Name Plate
3	AM	JM00242	1	Ammeter 0-50 ADC; 3 ½"; 2%; 50MV shunt rated; Yokogawa 255324ECNT w/mtg. opt. 2
4	VM	JM00281	1	Voltmeter 0-200 VDC; 3 ½"; 2%; Yokogawa 255320RLRL w/mtg. opt. 2
5A	ACB	JR00596	1	AC Circuit Breaker; 2P; 40A; 208VAC w/120 VAC shunt trip; Cutler Hammer (West.) EHD 2040
5B	ACB	JR00595	1	AC Circuit Breaker; 2P; 35A; 240 VAC w/120 VAC shunt trip; Cutler Hammer (West.) EHD 2035
5C	ACB	JR00600	1	AC Circuit Breaker; 2P; 20A; 480 VAC w/120 VAC, shunt trip; Cutler Hammer (West.) EHD 2020
6	DCB	JR00222	1	DC Circuit Breaker; 2P; 50A; Cutler Hammer (West.) Type QC 2050
7	PL	JL00592	1	Pilot light, 115 VAC, Amber, Leecraft 32R2113T or IDI 1050QC3
*8	CBA	MBC03952SA	1	Control Board;
9	HVSD	MBC03970A-130	1	High voltage shutdown board;
10	PXF	T01760	1	Power Transformer;
11	RC	JC00117	1	Resonant Capacitor, 30 uF, 660 VAC; Cornell-Dubilier KBSM66U306M3E-3
11A	RC	JC00118	1	Resonant Capacitor, 25 uF, 660 VAC; Cornell-Dubilier KBSM66U256M3E-3
12	RR	T01606	1	Resonant Reactor;
13	FC	T01650	1	Filter Choke;
14	C1	JC00144	5	Filter Capacitor 7,400 uF, 200 VDC, Cornell-Dubilier DCM742T200DF2B
15	D1, D2	JS00702	1	Rectifier Assembly, 70A, 600V,
*15A	D1, D2	JS00594	2	Diode, 85A, 600V, Forward, Microsemi S-3760 DS175-08BX8 or Edal F6K3 or Int.
			1	Rectifier 70HF60A
*16	TRIAC	JS00826		Triac, 35A, 600V, Sansha Electric Mfg. Co. Ltd. (Sanrex) TG35E60
17	ACF	JR00817	1	AC Power Failure Alarm Relay, 3PDT, 120 VAC, 10A, P&B KUP14A55-120
18	C2	JC00144	2	Filter Capacitor, 7,400 uf, 200 VDC, Cornell-Dubilier DCM742T200DF2B
19	AS	JM00248	1	Ammeter Shunt, 50A, 50MV, RAM MSA-500 or Canadian Shunt Industries LA-50-50
20	CXF	JT00258	1	Control Transformer, Westinghouse 1F0890
*21	CF	JL00085	1	Fuse 1A, 250 VAC, Bussman, AGC-1
OPTIONAL EQUIPMENT See ARE130CE50F				

*Recommended Spare Parts

Please refer to Figure 4-5.

PARTS LIST
MODEL ARE130AC35F

ITEM	SCHEMATIC LEGEND	PART NUMBER	QTY.	DESCRIPTION
1	-	MBC-3716B	1	Cabinet Assembly: 20 ½" W x 36" H x 15" D
2	-	-	1	Data Name Plate
3	AM	JM00242	1	Ammeter 0-50 ADC; 3 ½"; 2%; 50MV shunt rated; Yokogawa 255324ECNT w/mtg. opt. 2
4	VM	JM00281	1	Voltmeter 0-200 VDC; 3 ½"; 2%; Yokogawa 255320RLRL w/mtg. opt. 2
5A	ACB	JR00606	1	AC Circuit Breaker; 2P; 70A; 120VAC w/120 VAC shunt trip; Cutler Hammer (West.) EHD 2070
5B	ACB	JR00596	1	AC Circuit Breaker; 2P; 40A; 208 VAC w/120 VAC shunt trip; Cutler Hammer (West.) EHD 2040
5C	ACB	JR00595	1	AC Circuit Breaker; 2P; 35A; 240 VAC w/120 VAC, shunt trip; Cutler Hammer (West.) EHD 2035
6	DCB	JR00222	1	DC Circuit Breaker; 2P; 50A; Cutler Hammer (West.) Type QC 2050
7	PL	JL00592	1	Pilot light, 115 VAC, Amber, Leecraft 32R2113T or IDI 1050QC3
*8	CBA	MBC03952SA	1	Control Board;
9	HVSD	MBC03970A-130	1	High voltage shutdown board;
10	PXF	T-1682	1	Power Transformer;
11	RC	JC00117	1	Resonant Capacitor, 30 uF, 660 VAC; Cornell-Dubilier KBSM66U306M3E-3
11A	RC	JC00118	1	Resonant Capacitor, 25 uF, 660 VAC; Cornell-Dubilier KBSM66U256M3E-3
12	RR	T-1606	1	Resonant Reactor;
13	FC	T-1650	1	Filter Choke;
14	C1	JC00144	5	Filter Capacitor 7,400 uF, 200 VDC, Cornell-Dubilier DCM742T200DF2B
15	D1, D2	JS00702	1	Rectifier Assembly, 70A, 600V,
*15A	D1, D2	JS00594	2	Diode, 85A, 600V, Forward, Microsemi S-3760 DS175-08BX8 or Edal F6K3 or Int. Rectifier 70HF60A
*16	TRIAC	JS00826	1	Triac, 35A, 600V, Sansha Electric Mfg. Co. Ltd. (Sanrex) TG35E60
17	ACF	JR00817	1	AC Power Failure Alarm Relay, 3PDT, 120 VAC, 10A, P&B KUP14A55-120
18	C2	JC00144	2	Filter Capacitor, 7,400 uF, 200 VDC, Cornell-Dubilier DCM742T200DF2B
19	AS	JM00248	1	Ammeter Shunt, 50A, 50MV, RAM MSA-500 or Canadian Shunt Industries LA-50-50
OPTIONAL EQUIPMENT See ARE130CE50F				

*Recommended Spare Parts

Please refer to Figure 4-5.

PARTS LIST
MODEL ARE130CE50F

ITEM	SCHEMATIC LEGEND	PART NUMBER	QTY.	DESCRIPTION
1	-	MBC-3716B	1	Cabinet Assembly: 20 ½" W x 36" H x 15" D
2	-	-	1	Data Name Plate
3	AM	JM00243	1	Ammeter 0-75 ADC; 3 ½"; 2%; 50MV shunt rated; Yokogawa 255324ECPB w/mtg. opt. 2
4	VM	JM00281	1	Voltmeter 0-200 VDC; 3 ½"; 2%; Yokogawa 255320RLRL w/mtg. opt. 2
5A	ACB	JR00598	1	AC Circuit Breaker; 2P; 60A; 208VAC w/120 VAC shunt trip; Cutler Hammer (West.) EHD 2060
5B	ACB	JR00597	1	AC Circuit Breaker; 2P; 50A; 240 VAC w/120 VAC shunt trip; Cutler Hammer (West.) EHD 2050
5C	ACB	JR00601	1	AC Circuit Breaker; 2P; 25A; 480 VAC w/120 VAC, shunt trip; Cutler Hammer (West.) EHD 2025
6	DCB	JR00223	1	DC Circuit Breaker; 2P; 70A; Cutler Hammer (West.) Type QC 2070
7	PL	JL00592	1	Pilot light, 115 VAC, Amber, Leecraft 32R2113T or IDI 1050QC3
*8	CBA	MBC03952SA	1	Control Board;
9	HVSD	MBC03970A-130	1	High voltage shutdown board;
10	PXF	T-1761	1	Power Transformer;
11	RC	JC00117	2	Resonant Capacitor, 30 uF, 660 VAC; Cornell-Dubilier KBSM66U306M3E-3
11A	RC	JC00118	1	Resonant Capacitor, 25 uF, 660 VAC; Cornell-Dubilier KBSM66U256M3E-3
12	RR	T-1607	1	Resonant Reactor;
13	FC	T-1653	1	Filter Choke;
14	C1	JC00144	9	Filter Capacitor (standard) 7,400 uF, 200 VDC, Cornell-Dubilier DCM742T200DF2B
*15	D1, D2	JS00702	1	Rectifier Assembly, 70A, 600V,
*15A	D1, D2	JS00594	2	Diode, 85A, 600V, Forward, Microsemi S-3760 DS175-08BX8 or Edal F6K3 or Int. Rectifier 70HF60A
*16	TRIAC	JS00826	1	Triac, 35A, 600V, Sansha Electric Mfg. Co. Ltd. (Sanrex) TG35E60
17	ACF	JR00817	1	AC Power Failure Alarm Relay, 3PDT, 120 VAC, 10A, P&B KUP14A55-120
18	C2	JC00144	1	Filter Capacitor, 7,400 uf, 200 VDC, Cornell-Dubilier DCM742T200DF2B
19	AS	JM00249	1	Ammeter Shunt, 75 A, 50 MV, RAM MSA-750
20	CXF	JT00258	1	Control Transformer, Westinghouse 1F0890
*21	CF	JL00085	1	Fuse 1A, 250 VAC, Bussman, AGC-1

*Recommended Spare Parts

MODEL ARE130CE50F
OPTIONAL EQUIPMENT

ITEM	SCHEMATIC LEGEND	PART NUMBER	QTY.	DESCRIPTION
22	H/LVA	MBC03930-130	1	High/Low Voltage Alarm Relay;(optional)
23	NCA/LS	MBC04037-130	1	No Charge Alarm/Load Sharing; (optional)
24	GDA	MBC04031-130	1	Ground Detection Relay; (optional)
25	TS-4		1	Customer Connection Panel; (optional)
26		JS00663	1	Blocking Diode; (optional)
27		JL00696	1 – 3	Alarm Light-Red; (optional) 125 VDC, Leecraft 45RN-2311T3
28		JL00697	2	Alarm Light-Green; (optional) 125VDC, Leecraft 45RN-2312T3

Please refer to Figure 4-5.

PARTS LIST
MODEL ARE130SSN50F

ITEM	SCHEMATIC LEGEND	PART NUMBER	QTY.	DESCRIPTION
1	-	MBC-3716B	1	Cabinet Assembly: 20 ½" W x 36" H x 15" D
2	-	-	1	Data Name Plate
3	AM	JM00243	1	Ammeter 0-75 ADC; 3 ½"; 2%; 50MV shunt rated; Yokogawa 255324ECPB w/mtg. opt. 2
4	VM	JM00281	1	Voltmeter 0-200 VDC; 3 ½"; 2%; Yokogawa 255320RLRL w/mtg. opt. 2
5	ACB	JR00596	1	AC Circuit Breaker; 2P; 40A; w/120 VAC shunt trip; Cutler Hammer (West.) EHD 2040
6	DCB	JR00223	1	DC Circuit Breaker; 2P; 70A; Cutler Hammer (West.) Type QC 2070
7	PL	JL00592	1	Pilot light, 115 VAC, Amber, Leecraft 32R2113T or IDI 1050QC3
*8	CBA	MBC03952SA	1	Control Board;
9	HVSD	MBC03970A-130	1	High voltage shutdown board;
10	PXF	T02016	1	Power Transformer;
11	RC	JC00117	3	Resonant Capacitor, 30 uF, 660 VAC; Cornell-Dubilier KBSM66U306M3E-3
11A	RC	JC00225	1	Resonant Capacitor, 5 uF, 660 VAC; Cornell-Dubilier KBSM66U505M32-3
12	RR	T01916	1	Resonant Reactor;
13	FC	T01653	1	Filter Choke;
14	C1	JC00144	9	Filter Capacitor (standard) 7,400 uF, 200 VDC, Cornell-Dubilier DCM742T200DF2B
*15	D1, D2	JS00702	1	Rectifier Assembly, 70A, 600V,
*15A	D1, D2	JS00594	2	Diode, 85A, 600V, Forward, Microsemi S-3760 DS175-08BX8 or Edal F6K3 or Int. Rectifier 70HF60A
*16	TRIAC	JS00826	1	Triac, 35A, 600V, Sansha Electric Mfg. Co. Ltd. (Sanrex) TG35E60
17	ACF	JR00817	1	AC Power Failure Alarm Relay, 3PDT, 120 VAC, 10A, P&B KUP14A55-120
18	C2	JC00144	1	Filter Capacitor, 7,400 uf, 200 VDC, Cornell-Dubilier DCM742T200DF2B
19	AS	JM00249	1	Ammeter Shunt, 75 A, 50 MV, RAM MSA-750
20	-	-	-	Not Used
21	-	-	-	Not Used

*Recommended Spare Parts

MODEL ARE130SSN50F
OPTIONAL EQUIPMENT

ITEM	SCHEMATIC LEGEND	PART NUMBER	QTY.	DESCRIPTION
22	H/LVA	MBC03930-130	1	High/Low Voltage Alarm Relay;(optional)
23	NCA/LS	MBC04037-130	1	No Charge Alarm/Load Sharing; (optional)
24	GDA	MBC04031-130	1	Ground Detection Relay; (optional)
25	TS-4		1	Customer Connection Panel; (optional)
26		JS00663	1	Blocking Diode; (optional)
27		JL00696	1 – 3	Alarm Light-Red; (optional) 125 VDC, Leecraft 45RN-2311T3
28		JL00697	2	Alarm Light-Green; (optional) 125VDC, Leecraft 45RN-2312T3

FIGURE 4-6: DIMENSIONS FOR MBC-3410B CABINET 12 ¼" HIGH

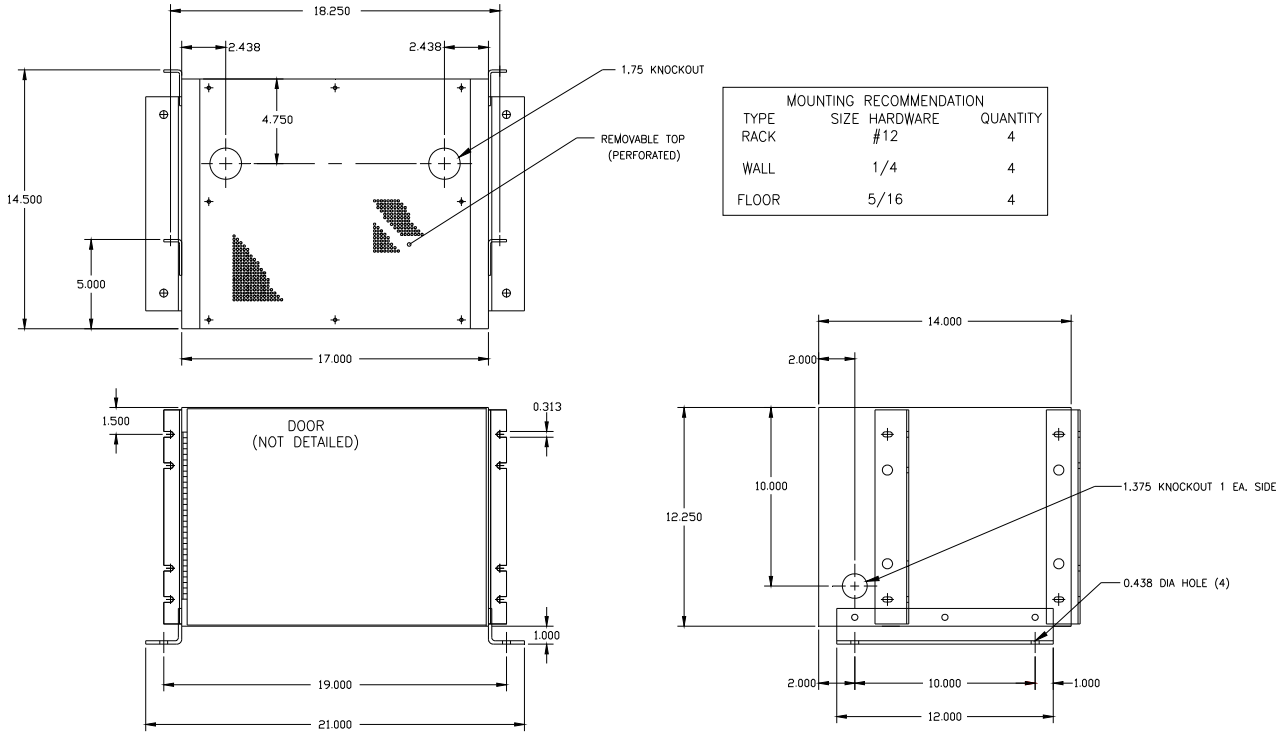

MOUNTING RECOMMENDATION		
TYPE	SIZE HARDWARE	QUANTITY
RACK	#12	4
WALL	1/4	4
FLOOR	5/16	4

FIGURE 4-7: DIMENSIONS FOR MBC-3420B CABINET 24 ½" HIGH

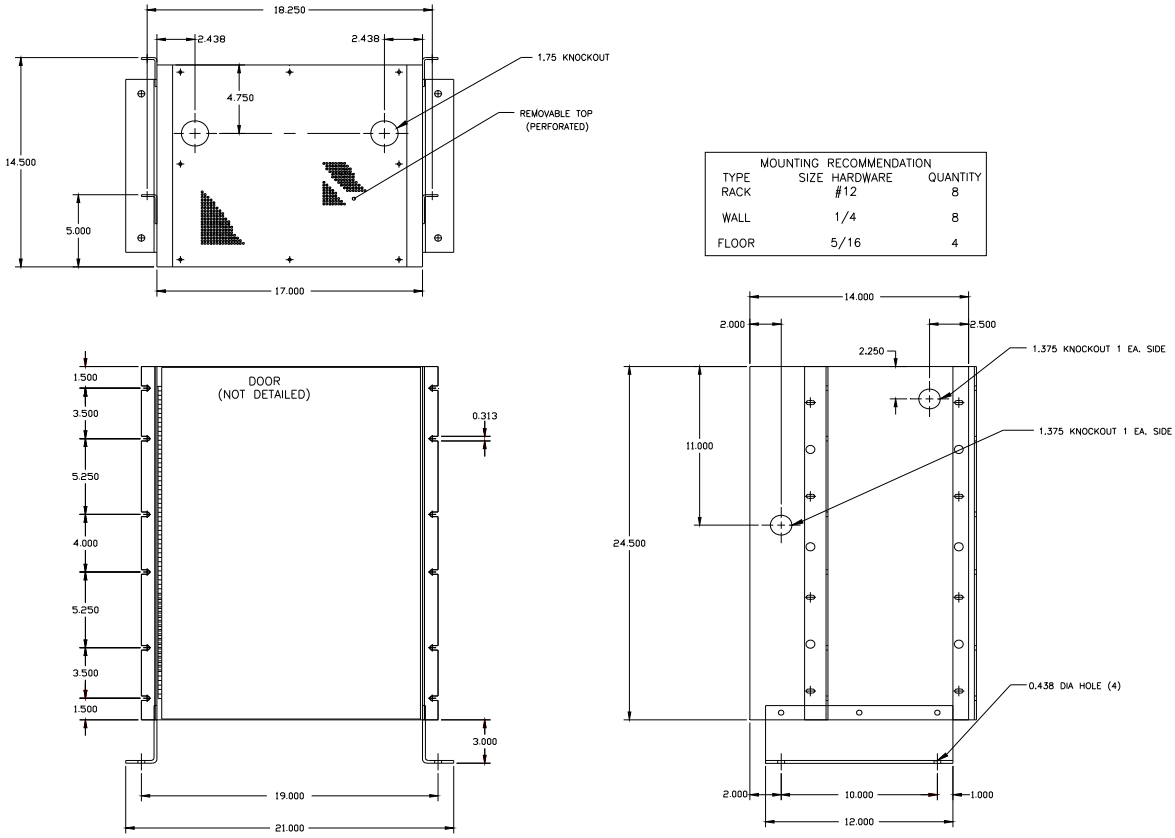

MOUNTING RECOMMENDATION		
TYPE	SIZE HARDWARE	QUANTITY
RACK	#12	8
WALL	1/4	8
FLOOR	5/16	4

FIGURE 4-8: DIMENSIONS FOR MBC-3700B CABINET 30” HIGH

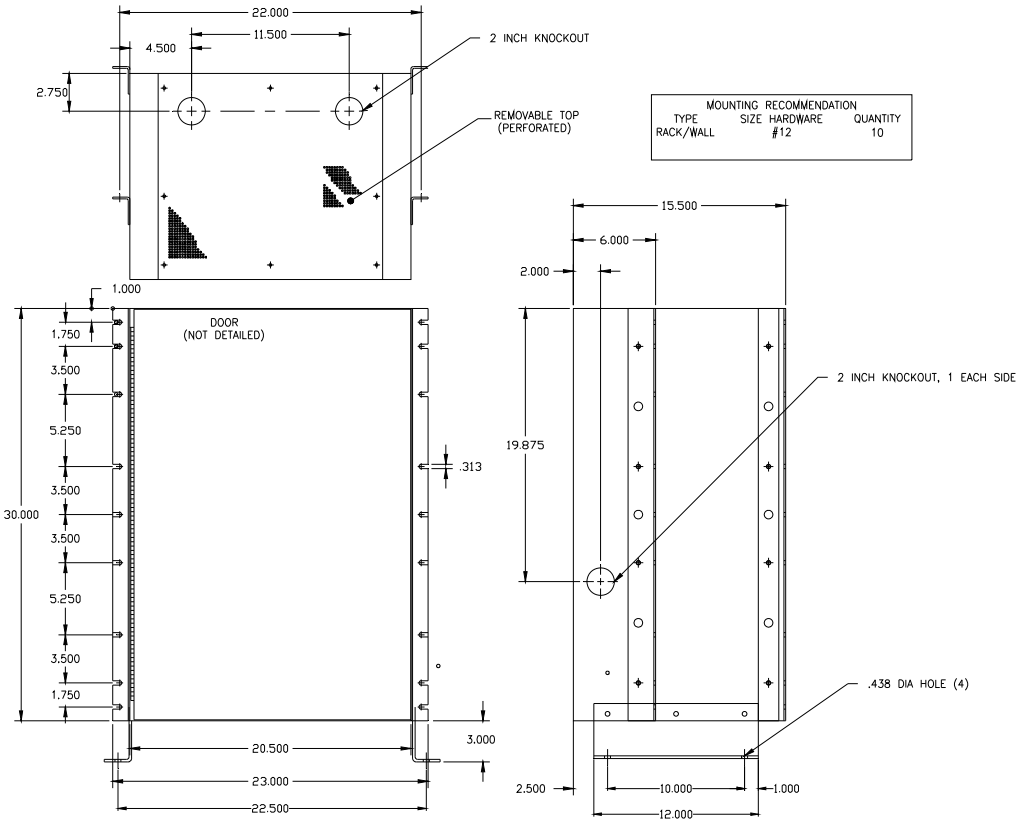

FIGURE 4-9: DIMENSIONS FOR MBC-3716B CABINET 36” HIGH

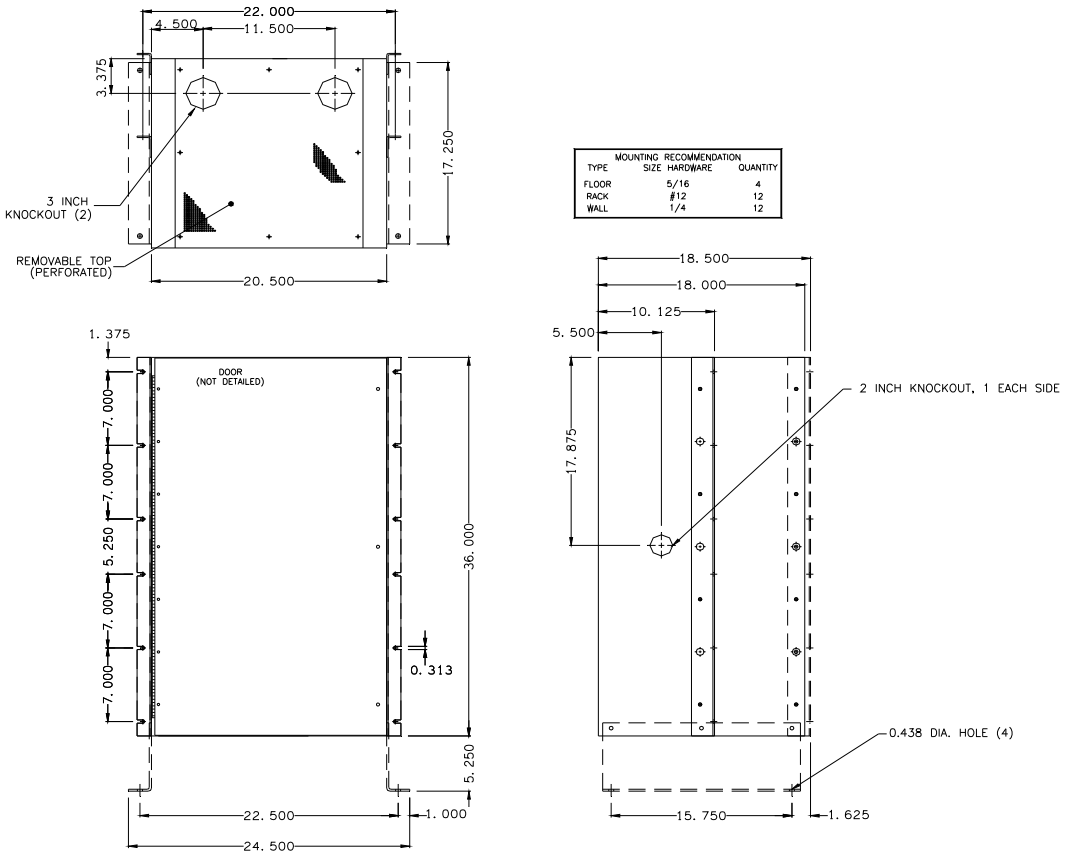

FIGURE 4-10: CONNECTION DIAGRAM FOR “ARE” 12-inch and 24-inch CABINETS (120/208/240 VAC)

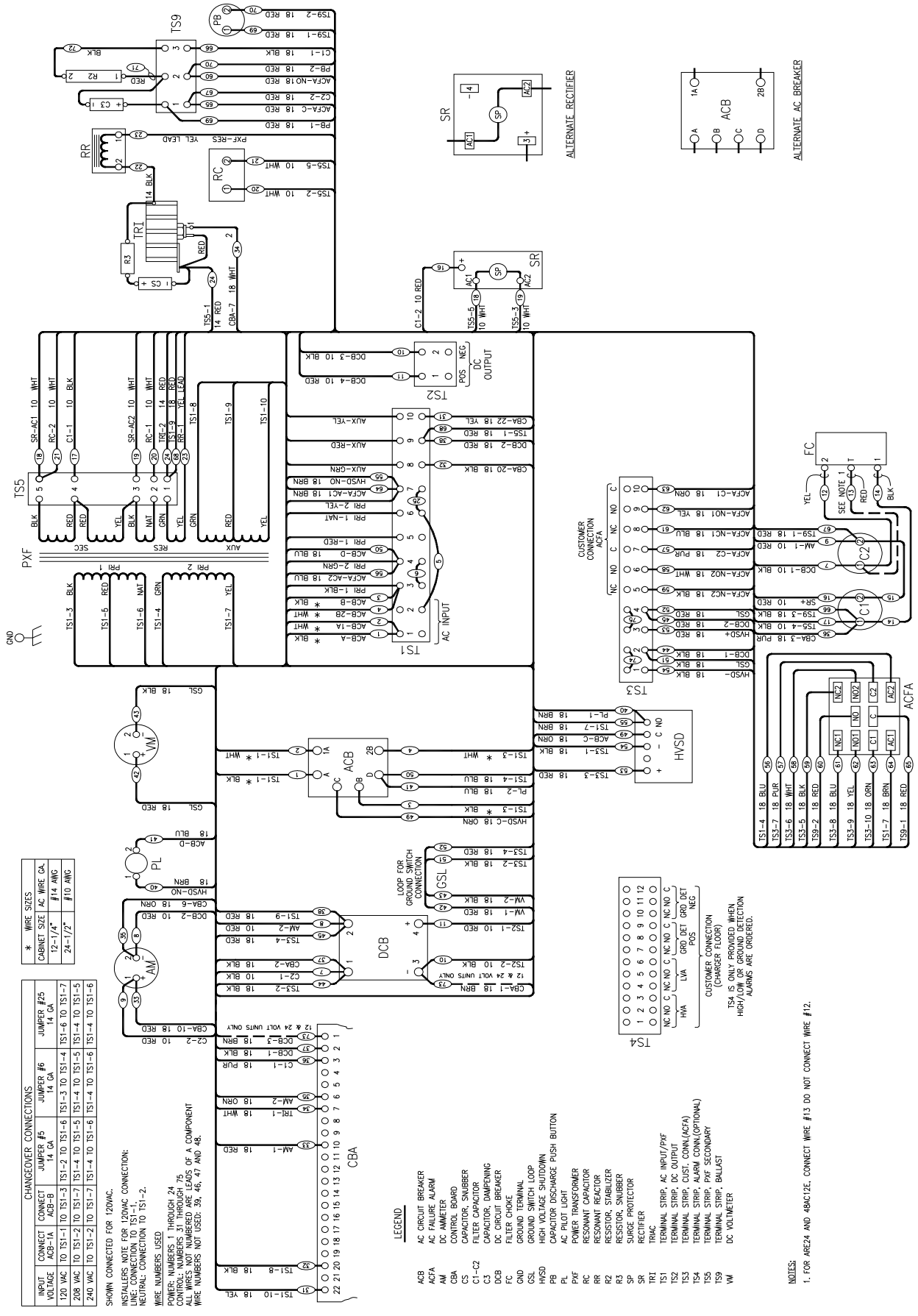

FIGURE 4-11: CONNECTION DIAGRAM FOR "ARE" 24-INCH CABINET (208/240/480 VAC)

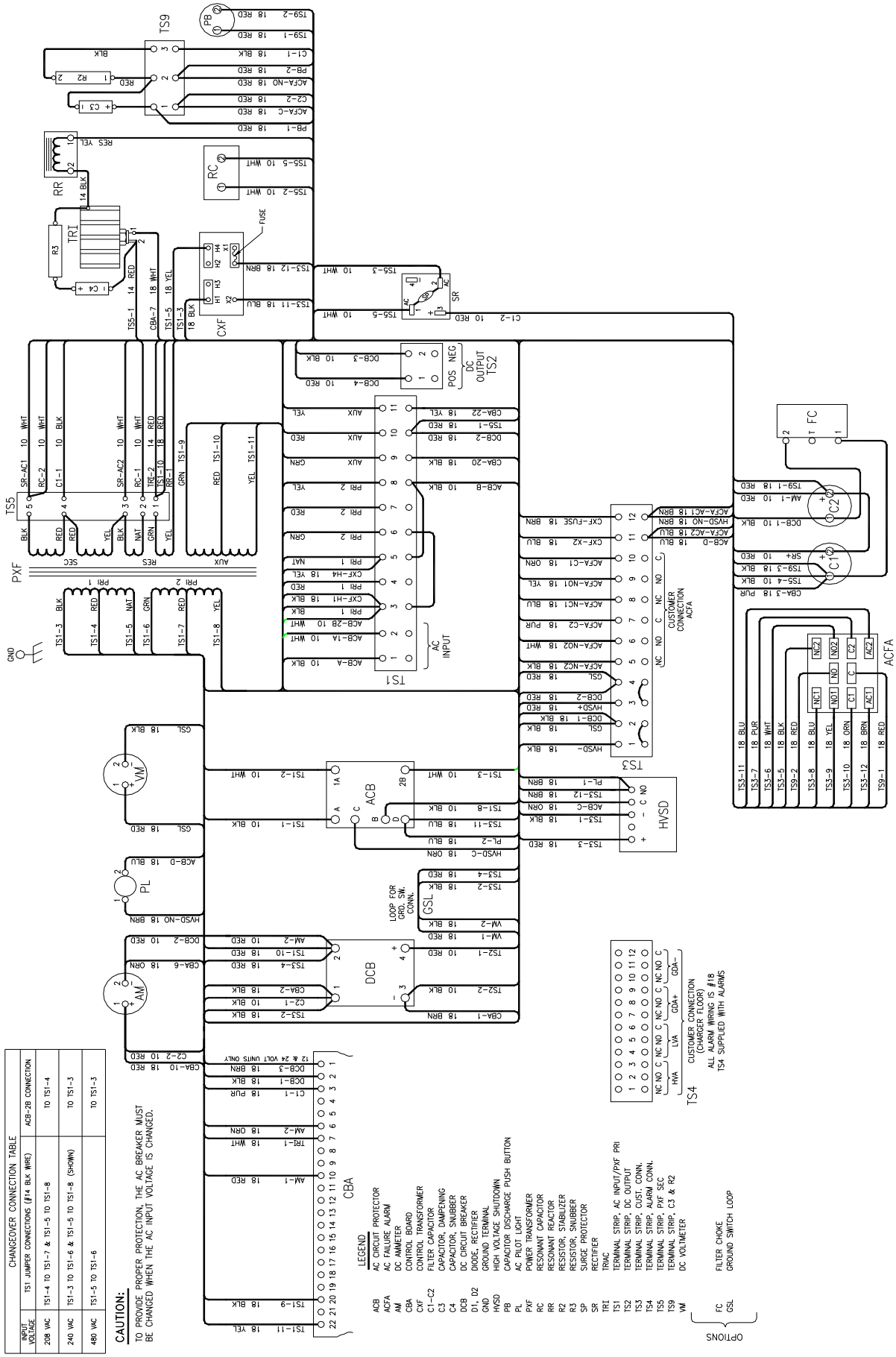

FIGURE 4-12: CONNECTION DIAGRAM FOR “ARE” 30-INCH CABINET (120/208/240 VAC)

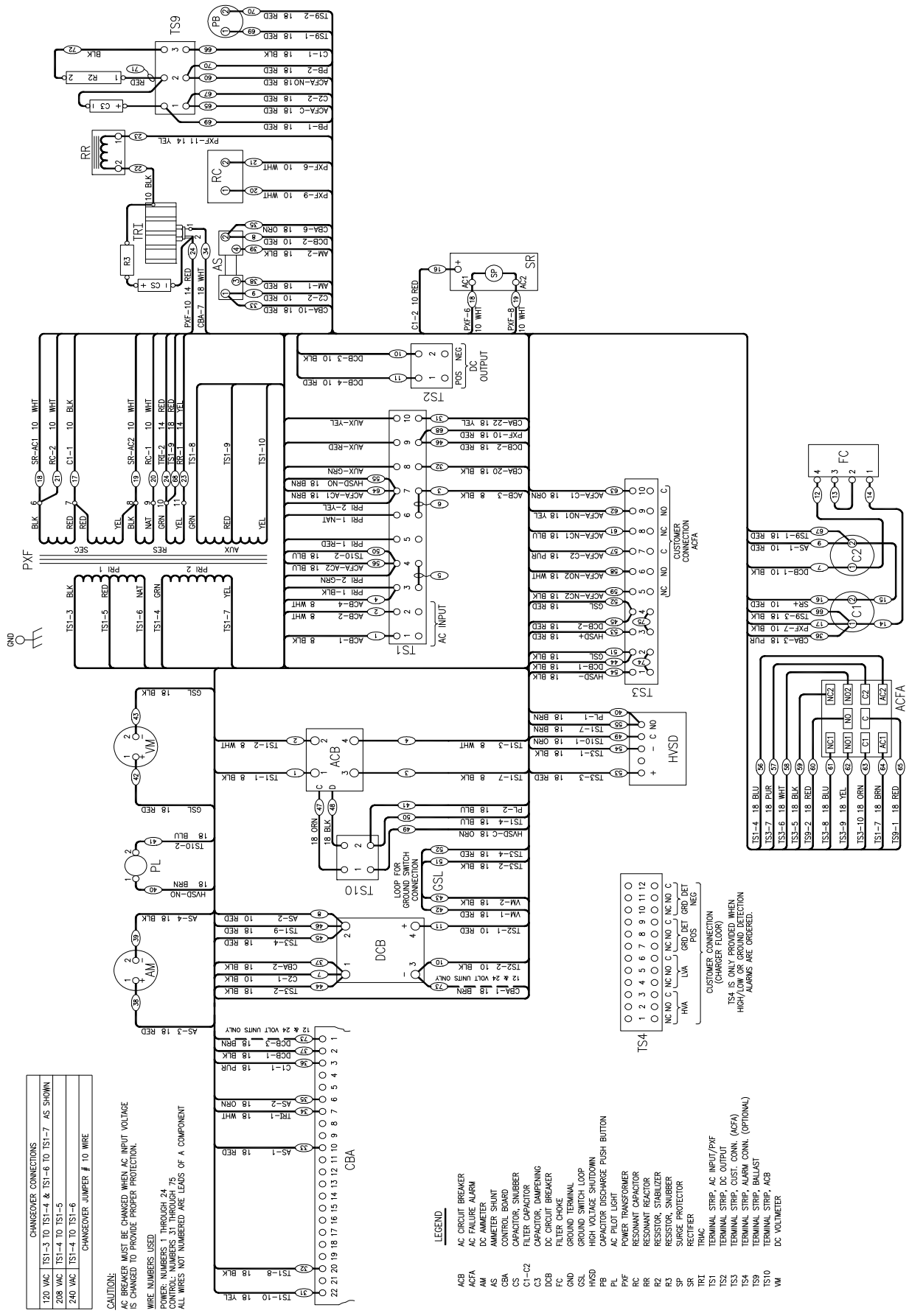

FIGURE 4-13: CONNECTION DIAGRAM FOR "ARE" 30-INCH CABINET (208/240/480 VAC)

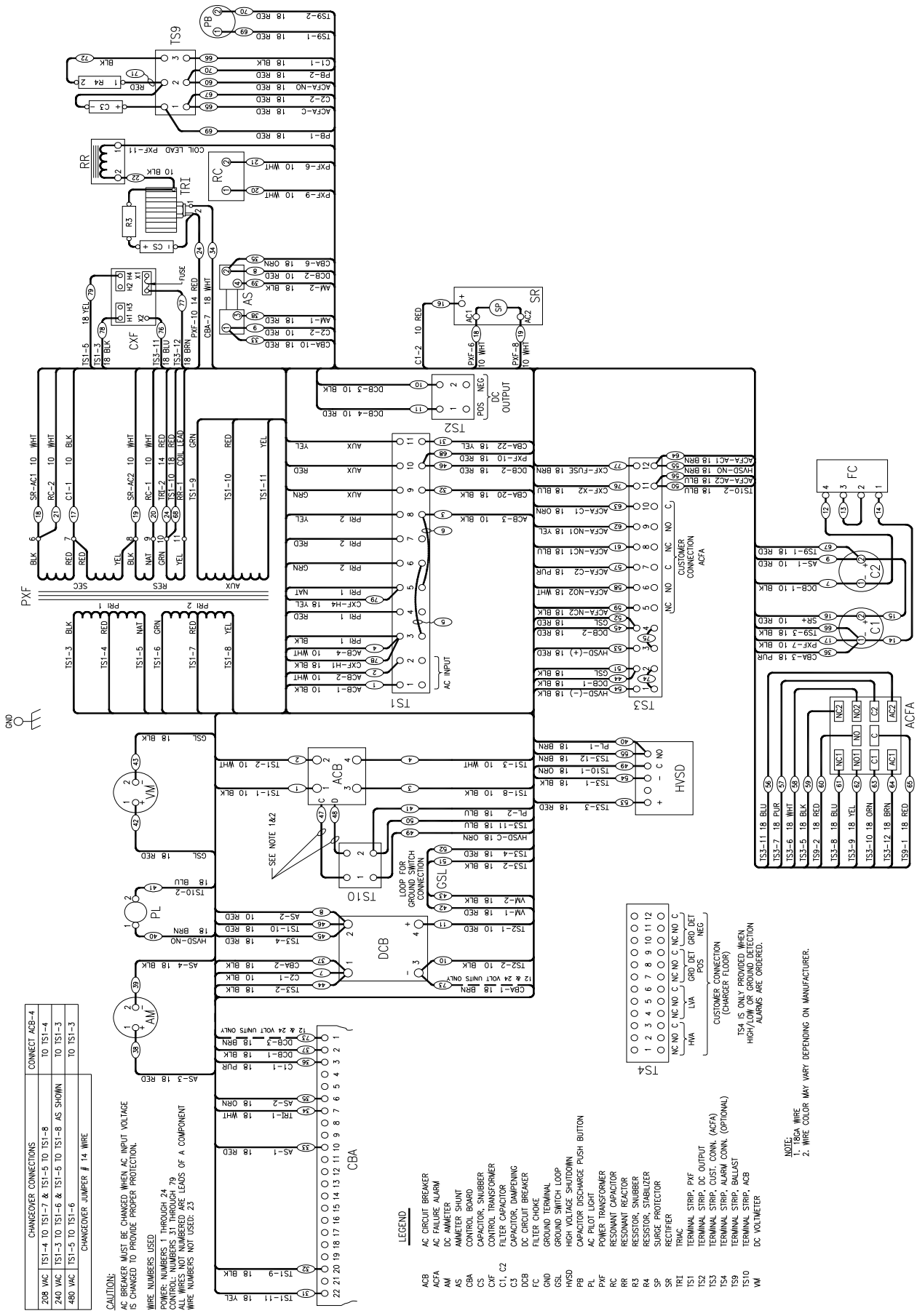

FIGURE 4-14: CONNECTION DIAGRAM 36-INCH CABINET (120/208/240 VAC)

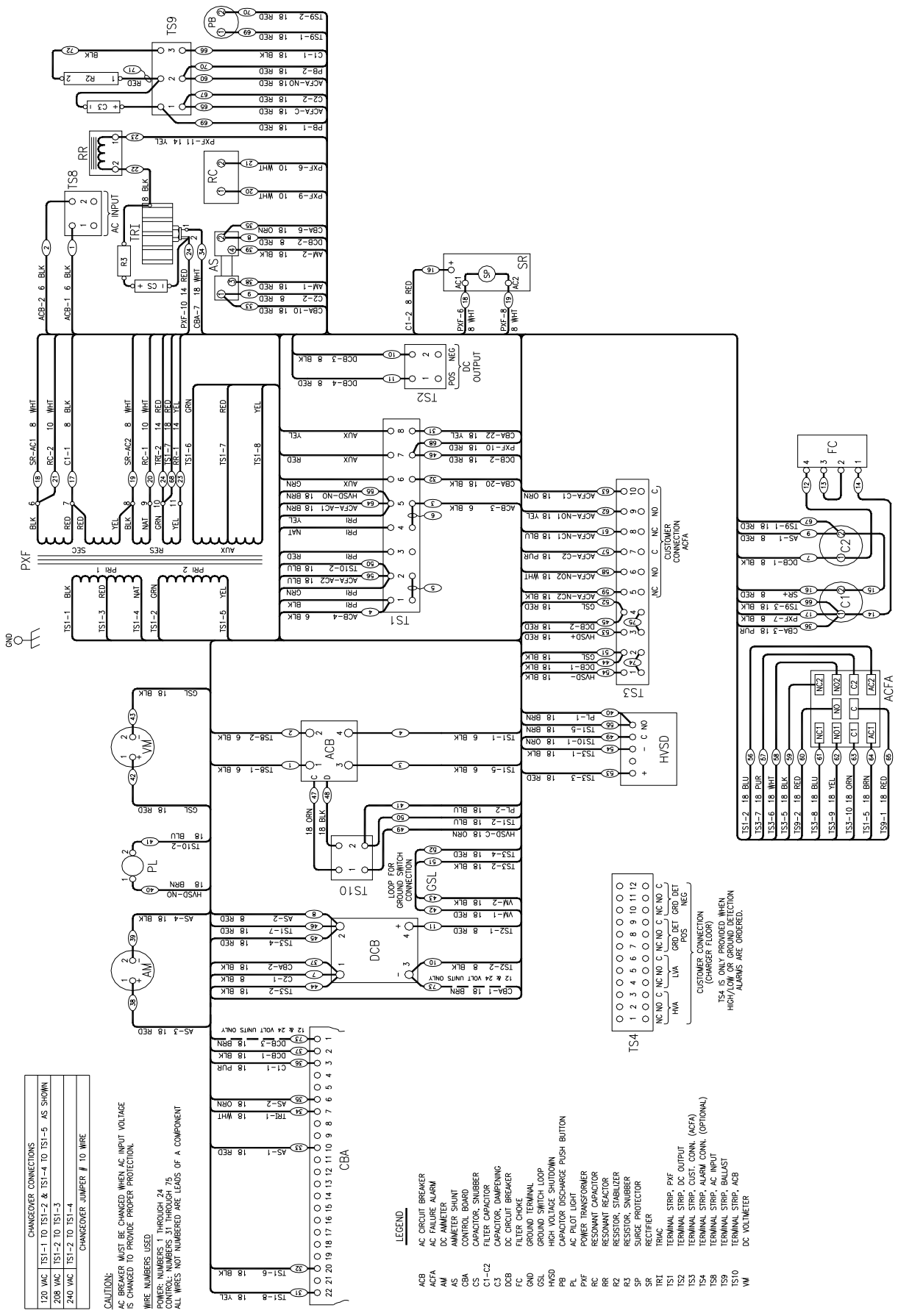

FIGURE 4-15: CONNECTION DIAGRAM FOR "ARE" 36-INCH CABINET (208/240/480 VAC)

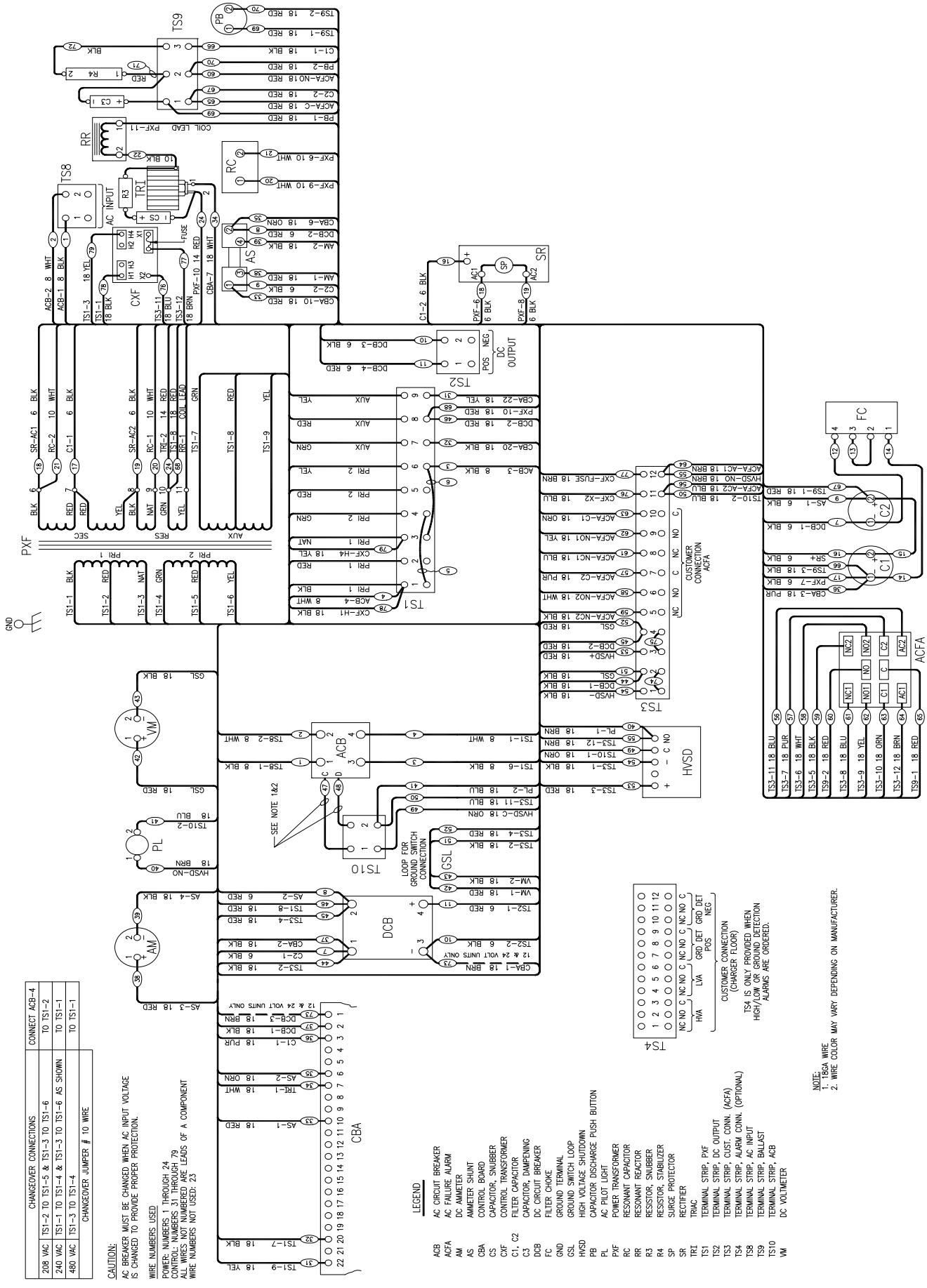

FIGURE 4-16: SCHEMATIC DIAGRAM FOR "ARE" 12 AND 24 INCH CABINET (120/208/240 VAC)

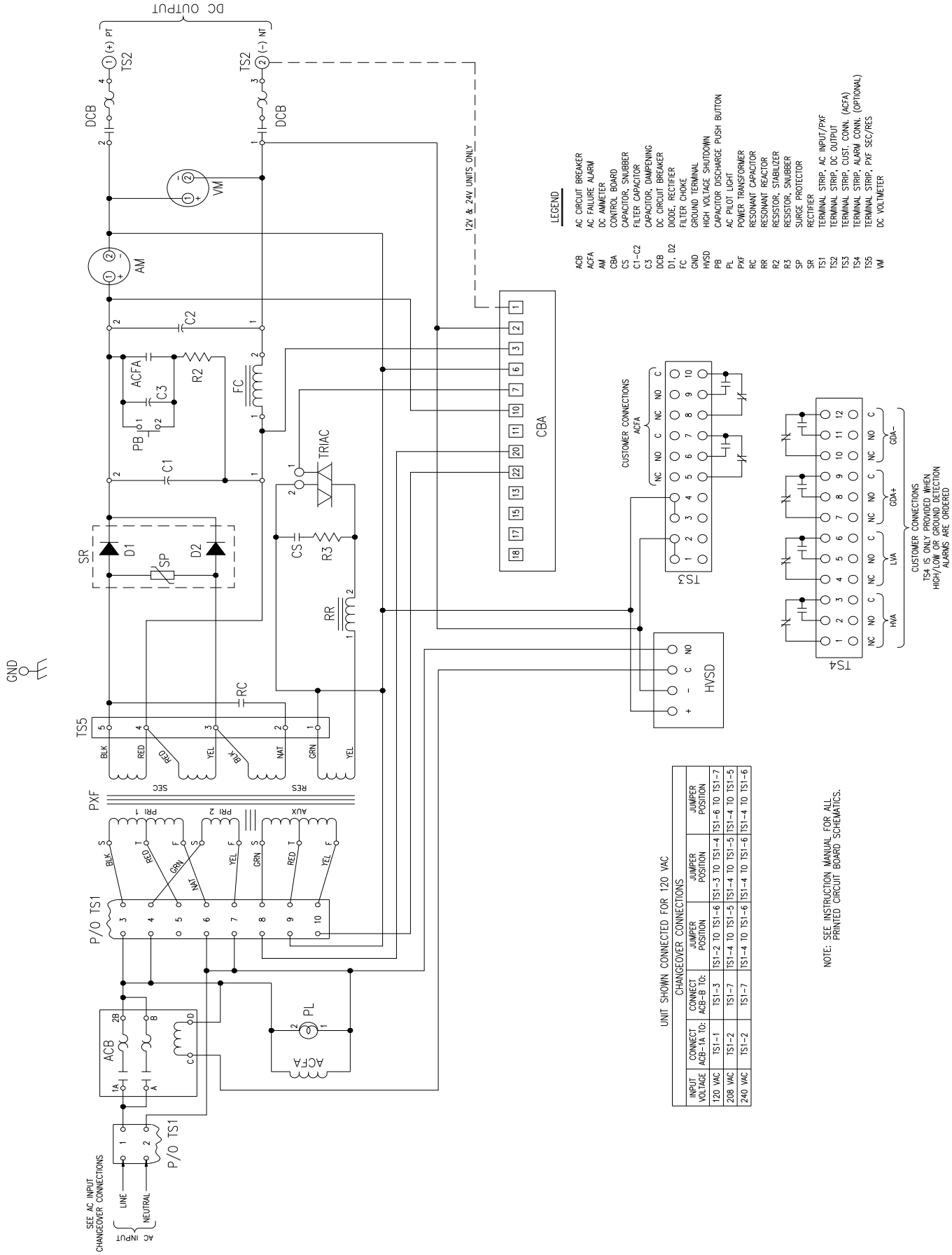

CHANGEOVER CONNECTIONS				
INPUT VOLTAGE	CONNECT ACB-1A TO:	CONNECT ACB-B TO:	JUMPER POSITION	JUMPER POSITION
120 VAC	TS1-1	TS1-3	TS1-2 TO TS1-6	TS1-3 TO TS1-4	TS1-6 TO TS1-7
208 VAC	TS1-2	TS1-7	TS1-4 TO TS1-5	TS1-4 TO TS1-5	TS1-4 TO TS1-5
240 VAC	TS1-2	TS1-7	TS1-4 TO TS1-6	TS1-4 TO TS1-6	TS1-4 TO TS1-6

FIGURE 4-17: SCHEMATIC DIAGRAM FOR "ARE" 24 INCH CABINET (208/240/480 VAC)

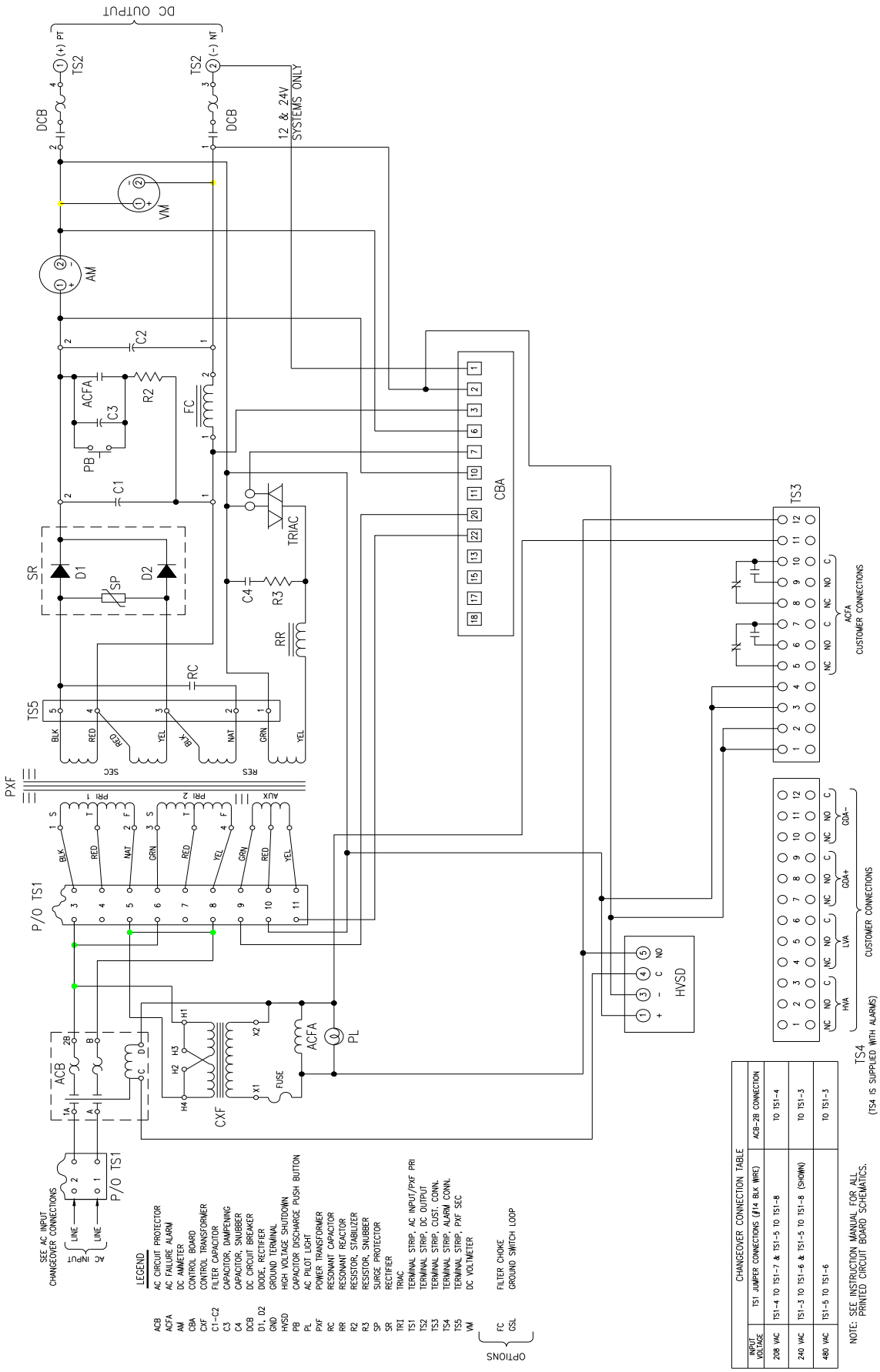

FIGURE 4-18: SCHEMATIC DIAGRAM FOR "ARE" 30 INCH CABINET (120/208/240VAC)

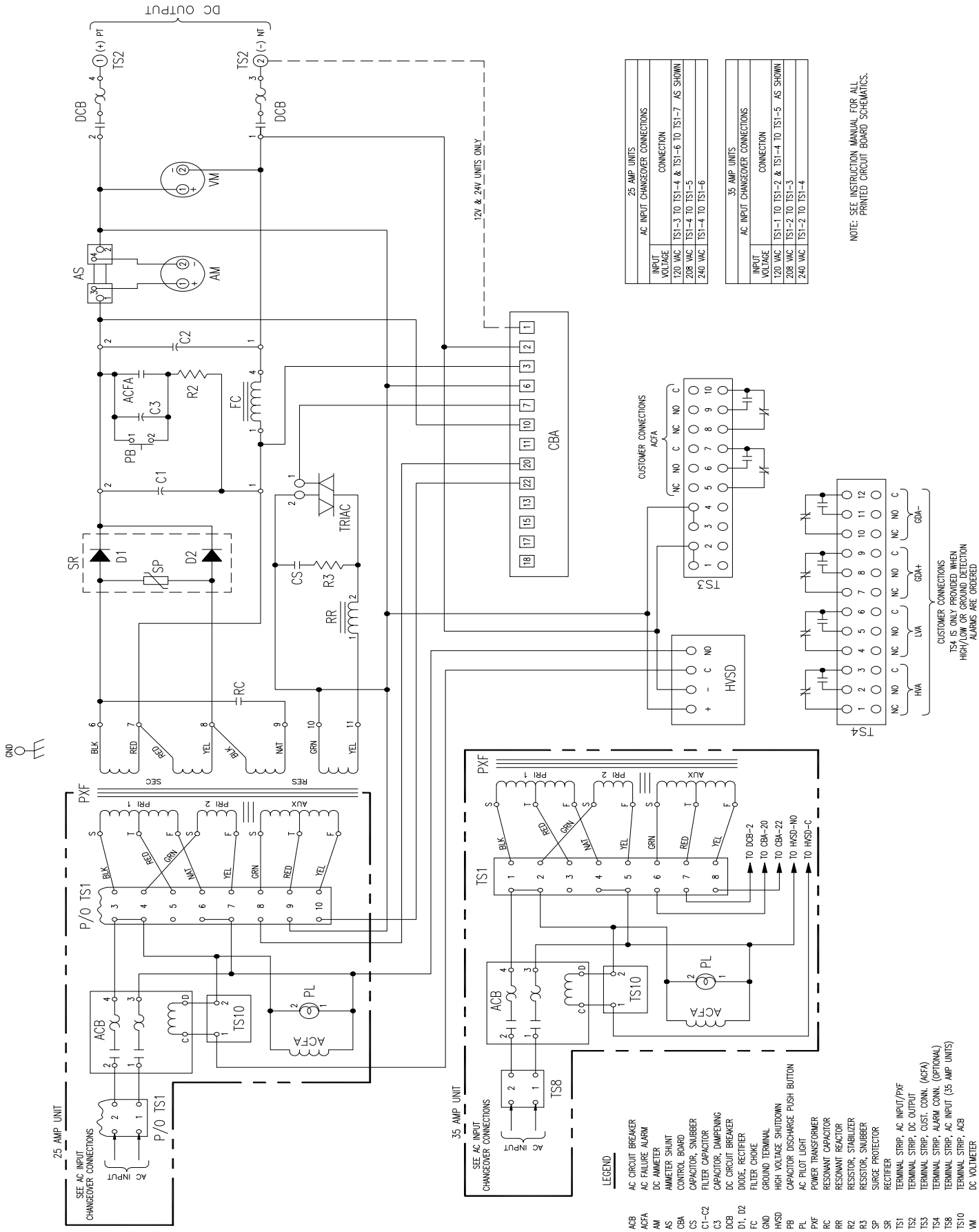

FIGURE 4-19: SCHEMATIC DIAGRAM FOR "ARE" 30 INCH CABINET (208/240/480VAC)

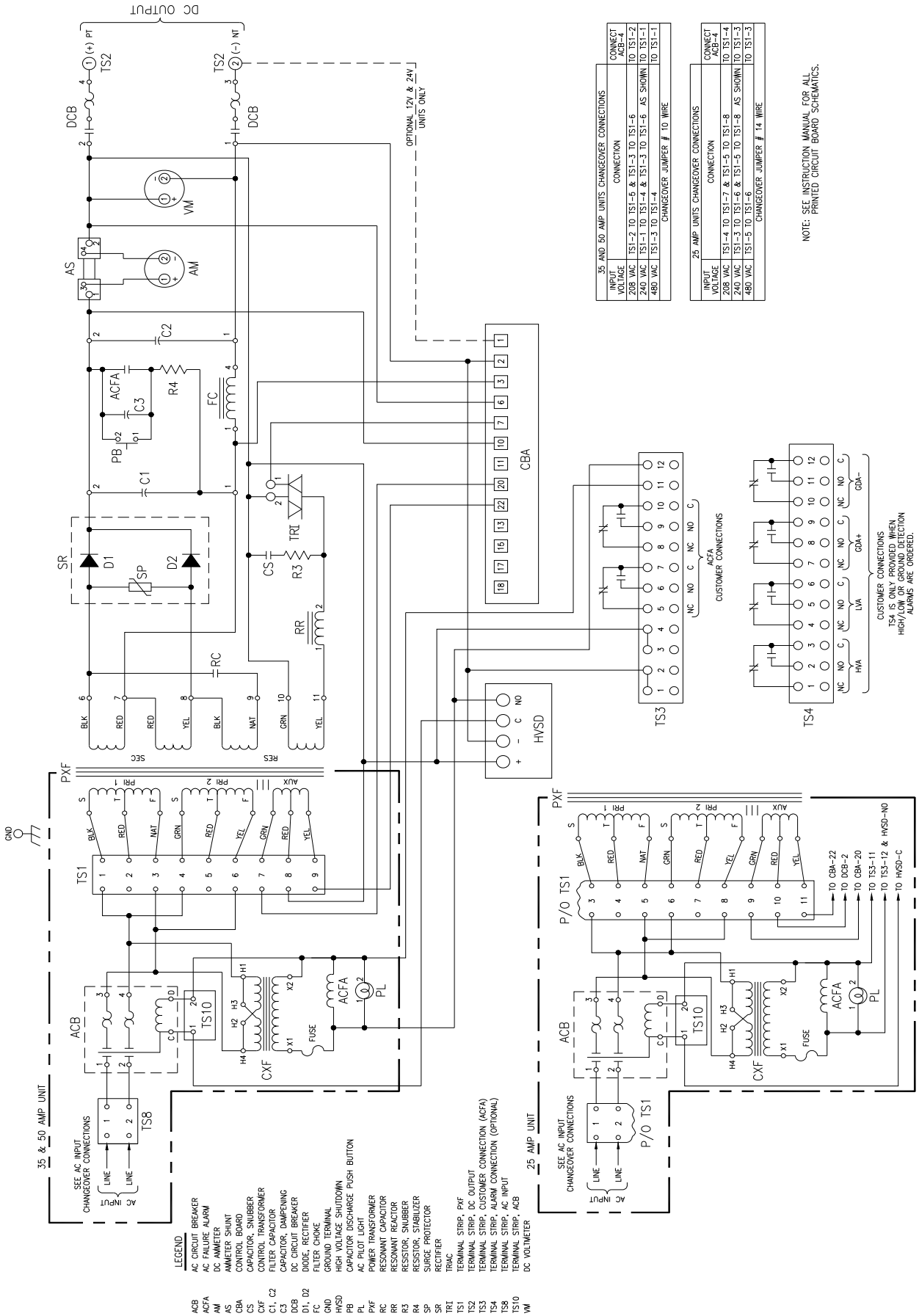

FIGURE 4-20: SCHEMATIC DIAGRAM FOR "ARE" 36-INCH CABINET (120/208/240 VAC)

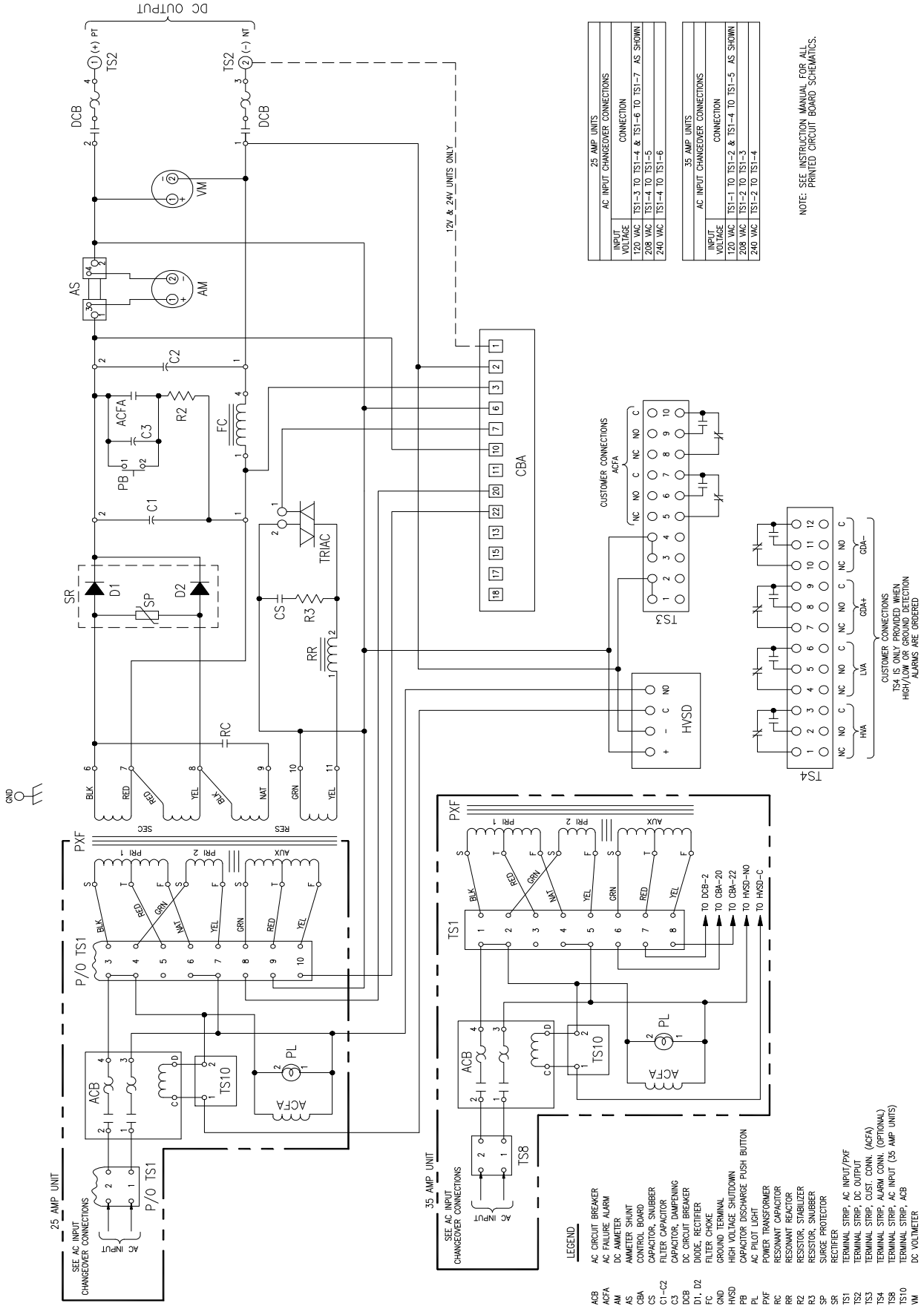

FIGURE 4-21: SCHEMATIC DIAGRAM FOR "ARE" 36-INCH CABINET (208/240/480 VAC)

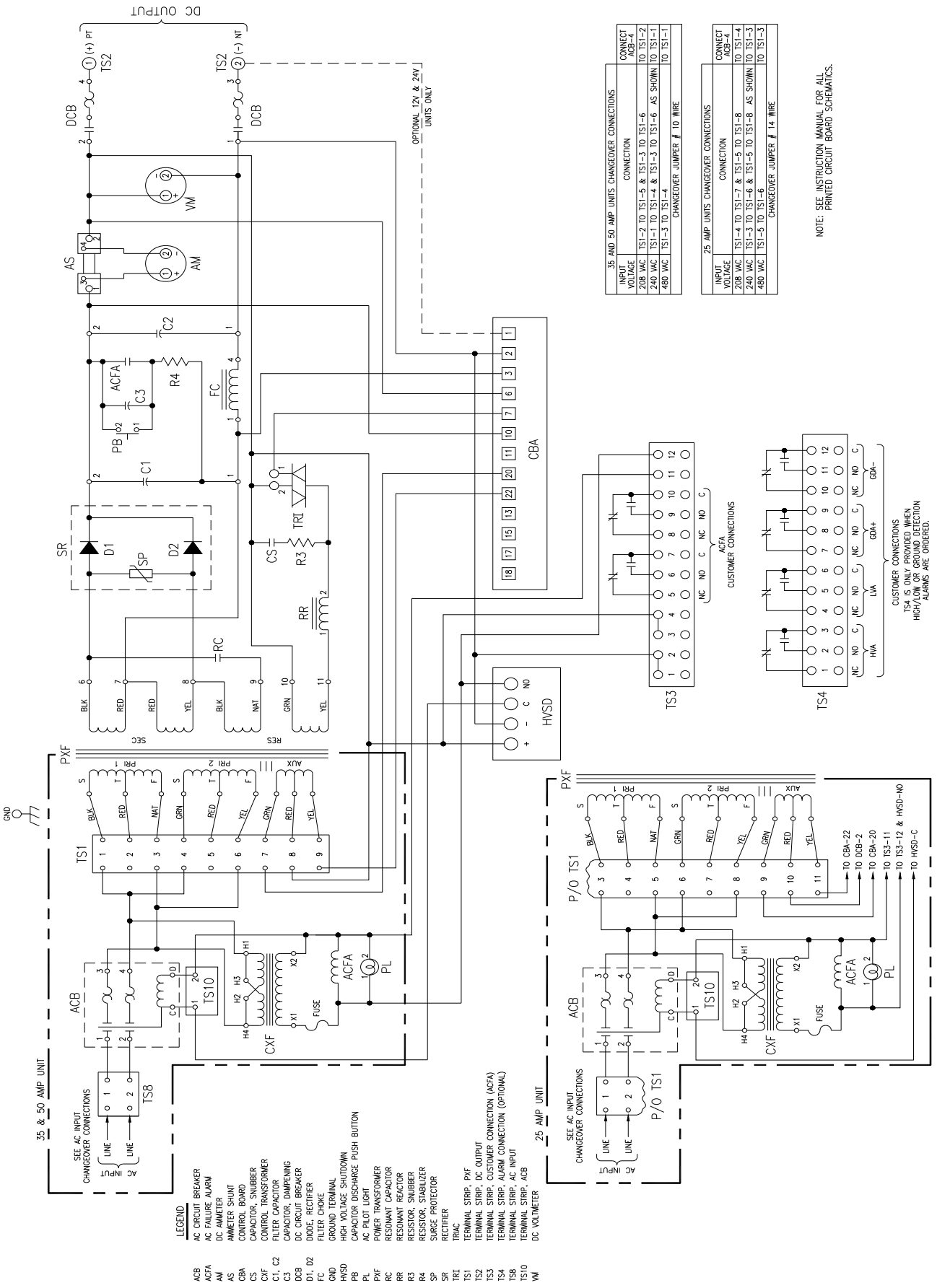

35 AND 50 AMP UNITS CHANGEOVER CONNECTIONS		
INPUT VOLTAGE	CONNECTION	CONNECT ACB-4
208 VAC	TS1-2 TO TS1-5 & TS1-3 TO TS1-6	TO TS1-2
240 VAC	TS1-1 TO TS1-4 & TS1-3 TO TS1-6 AS SHOWN	TO TS1-1
480 VAC	TS1-3 TO TS1-4	TO TS1-1
	CHANGEOVER JUMPER # 10 WIRE	

25 AMP UNITS CHANGEOVER CONNECTIONS		
INPUT VOLTAGE	CONNECTION	CONNECT ACB-4
208 VAC	TS1-4 TO TS1-7 & TS1-5 TO TS1-8	TO TS1-4
240 VAC	TS1-3 TO TS1-6 & TS1-5 TO TS1-8 AS SHOWN	TO TS1-3
480 VAC	TS1-5 TO TS1-6	TO TS1-3
	CHANGEOVER JUMPER # 14 WIRE	

NOTE: SEE INSTRUCTION MANUAL FOR ALL PRINTED CIRCUIT BOARD SCHEMATICS.

4.1 ASSEMBLY AND SCHEMATIC DIAGRAM FOR SINGLE-PHASE "ARE" HIGH VOLTAGE SHUTDOWN MBC-3970A-UNIT VOLTAGE

4.1.1 Instructions

1. Relay energizes on high voltage.
2. Adjust potentiometer clockwise to raise operating point.
3. Time delay approximately 1 sec.
4. Oper. Temp. range 0 C to 65 C (temp. co-eff. .05%/C).
5. Current drain 22 MA.

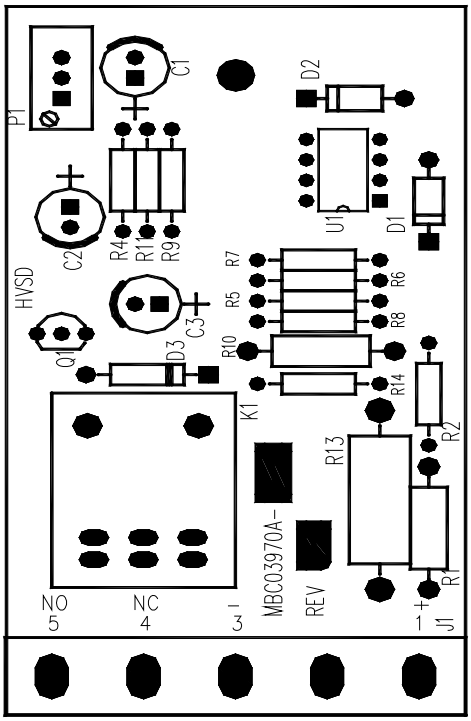

Components for Operation on 24, 48, 130V

	24 V	48V	130V
R1	6.8K, JE-387	27K, JE-394	82K, JE-460
R2	2.7K, JE-381	1.5K, JE-378	4.7K, JE-384
R13	JUMPER, JE-355	2.2K, JE-107	7.5K, JE-23

SEQ	REF DES	QTY	PART#	DESCRIPTION
1		1	MBC-3970A	PC BOARD
2	C1, C3	1	JC-104	CAPACITOR, 10uF, 50V
3	C2	1	JC-158	CAPACITOR, 47uF
5	D1	1	JS-358	DIODE, ZENER, 6.2V
6	D2	1	JS-631	DIODE, ZENER, 10V
7	D3	1	JS-500	DIODE, 1N4004
8	J1	1	JL-489	TERMINAL STRIP, 5POS, PC MOUNT
9	K1	1	JR-389	RELAY, DPDT
10	P1	1	JE-468	POTENTIOMETER, 10K
11	Ql	1	JS-489	TRANSISTOR, MPS-L01
12	R1	1		SEE TABLE ABOVE
13	R2	1		SEE TABLE ABOVE
14	R13	1		SEE TABLE ABOVE
15	R4	1	JE-393	RESISTOR, 22K, .25 WATT
16	RS, R6, R7	3	650.0355.00	RESISTOR, 680K, .25 WATT
17	R9, RS	2	JE-389	RESISTOR, 10K, .25 WATT
18	R10	1	661.0305.00	RESISTOR, 1.5K, 1 WATT
19	R11	I	JE-394	RESISTOR, 27K, .25 WATT
20	R14	1	JE-405	RESISTOR, 220K, .25 WATT
21	U1	1	552.0400.00	IC, LM393A

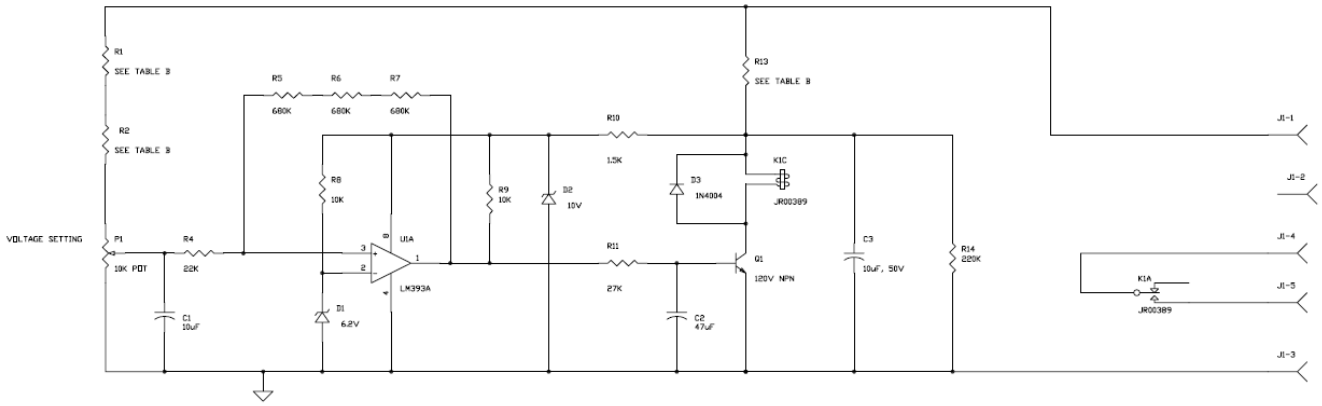

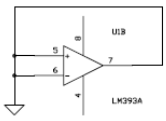

FIGURE 4-22: SCHEMATIC DIAGRAM FOR "ARE" CONTROL BOARD

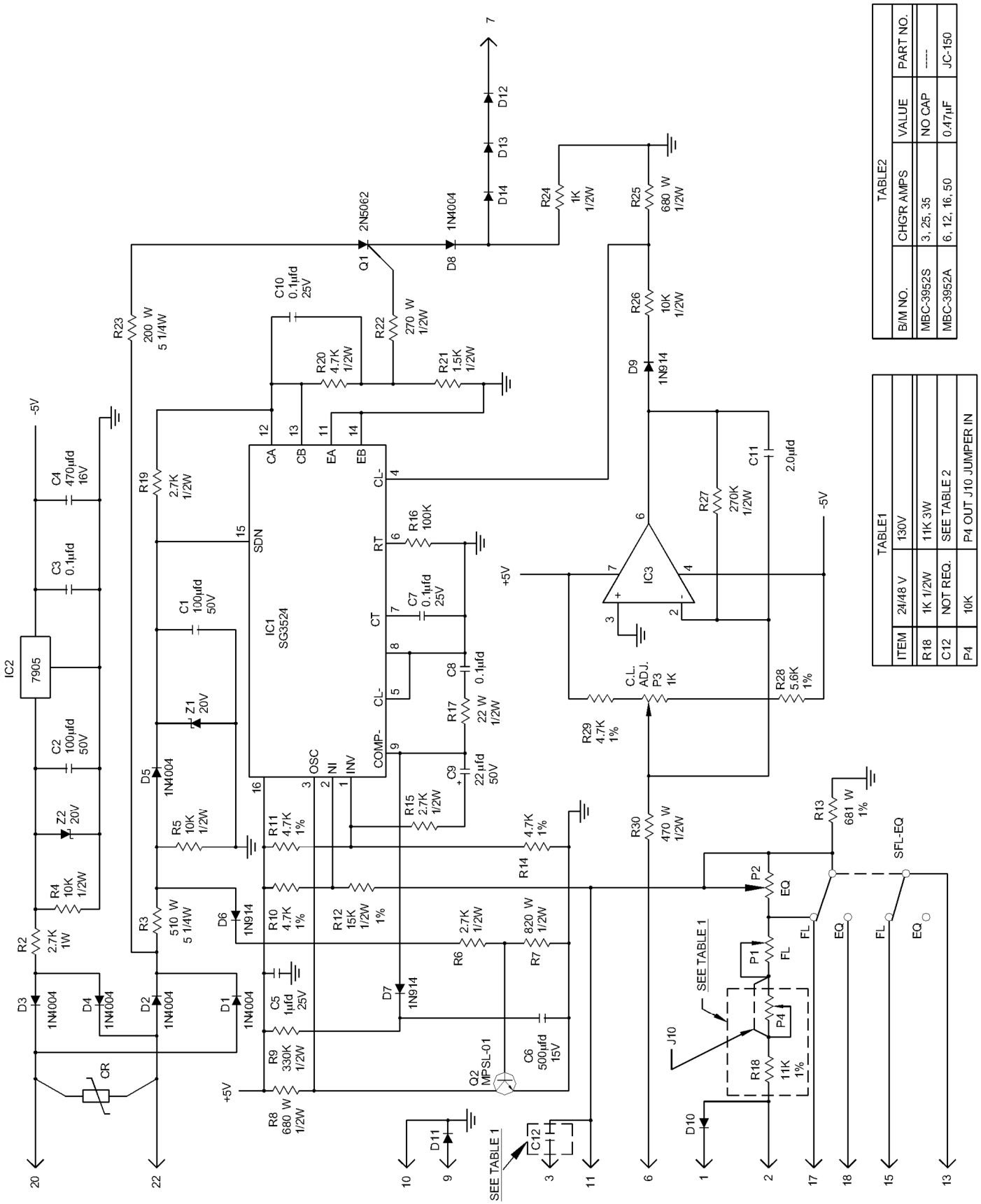

FIGURE 4-23: ASSEMBLY DIAGRAMS FOR "ARE" CONTROL BOARD

130V DC (See Table 4-2)

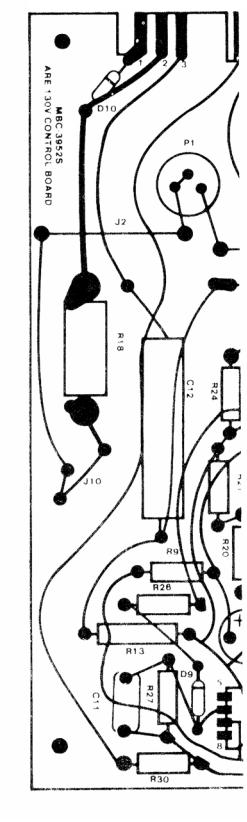

24/48V (MBC-4226)

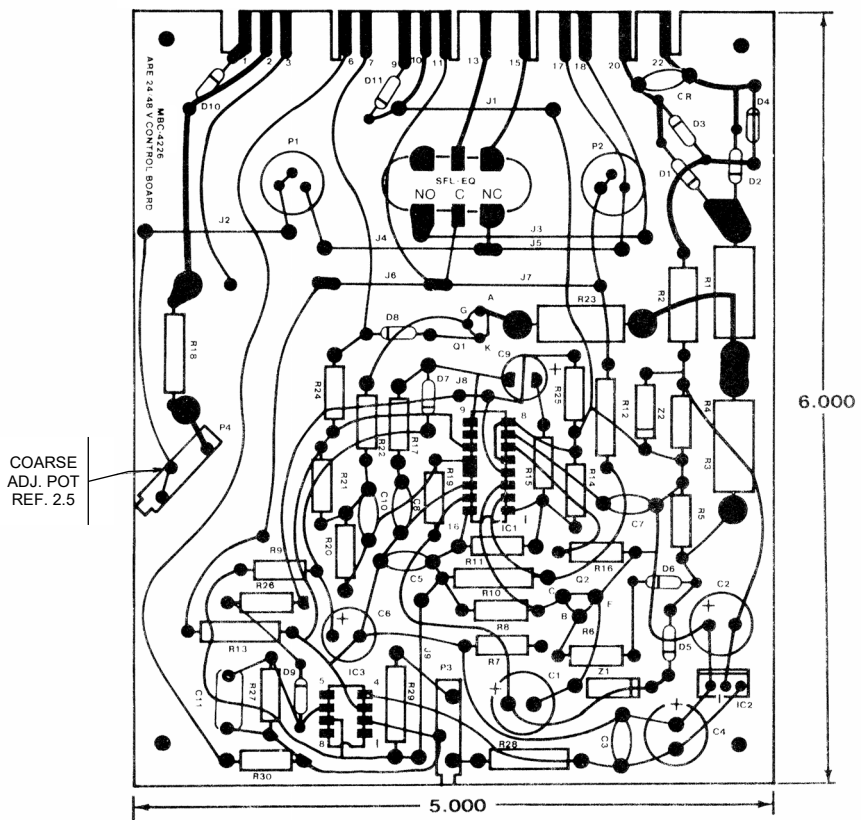

TABLE 4-1: 24/48V DC CONTROL BOARD

LEGEND	QTY	DESCRIPTION	ARE24/48 VOLT	ARE 130 VOLT
SFL-EQ	1	ROCKER SWITCH DPDT	JL00637	JL00637
P4	1	POTENTIOMETER, 10K OHM 20 TURN	JE00206	NOT REQUIRED
P3	1	POTENTIOMETER,1K OHM 20 TURN	JE00223	JE00223
P1,P2	2	POTENTIOMETER	JE00261 (1K)	JE00342 (5K)
C12	1	CAPACITOR	NOT REQUIRED	SEE TABLE B
C11	1	CAPACITOR, 2.2 MF 50V NP	JC00159	JC00159
C9	1	CAPACITOR ELECTROLYTIC 22MF 50V	JC00091	JC00091
C4, C6	2	CAPACITOR ELECTROLYTIC 450MF 16V	JC00090	JC00090
C3,C5,C7,C8, C10	5	CAPACITOR DISC .1MF 25V	JC00098	JC00098
C1,C2	2	CAPACITOR ELECTROLYTIC 100MF 50V	JC00097	JC00097
R30	1	RESISTOR,CARBON,470 OHM ½ W	JE00117	JE000117
R28	1	RESISTOR 5.6K OHM 1% ½ W	JE00354	JE000354
R27	1	RESISTOR CARBON 270 K OHM ½ W	JE00301	JE000301
R24	1	RESISTOR CARBON 100 OHM ½ W	JE00113	JE00113
R23	1	RESISTOR CARBON 200 OHM 5 ¼ W .5%	JE00526	JE00526
R22	1	RESISTOR CARBON 270 OHM ½ W	JE00277	JE00277
R21	1	RESISTOR CARBON 1.0K OHM ½ W	JE00102	JE00102
R18	1	RESISTOR CARBON	JE00098(1K,1/2 W,1%)	JE00120(11K,1%,3W)
R17	1	RESISTOR CARBON 22 OHM ½ W	JE00112	JE00112
R16	1	RESISTOR CARBON 100K OHM ½ W	JE00141	JE00141
R13	1	RESISTOR FILM 681 OHM 1% ½ W	JE00101	JE00101
R12	1	RESISTOR , 15K OHM 1% ½ W	JE00335	JE00335
R20	1	RESISTOR CARBON 4.7 OHM ½ W	JE00114	JE00114
R10,R11,R14,R29	4	RESISTOR 4.7K OHM 1% ½ W	JE00097	JE00097
R9	1	RESISTOR CARBON 330K OHM 5% ½ W	JE00463	JE00463
R6, R15,R19	3	RESISTOR CARBON 2.7K OHM ½ W	JE00012	JE00012
R8,R25	2	RESISTOR CARBON 680 OHM ½ W 5%	655.0310.00	655.0310.00
R7	1	RESISTOR CARBON 820 OHM ½ W	JE00309	JE00309
R4, R5,R26	3	RESISTOR CARBON 10K OHM ½ W	JE00111	JE00111
R2	1	RESISTOR CARBON 2.7K OHM,5%,1W	JE00513	JE00513
R3	1	RESISTOR CARBON 510 OHM 5 ¼ W 5%	JE00523	JE00523
1C3	1	IC, 741 C OP AMP	JS00482	JS00482
1C2	1	IC REGULATOR, -5V, LM7905	JS00707	JS00707
1C1	1	IC, Silicon General SG 3524	JS00624	JS00624
Z1,Z2	2	ZENER 20V, 1N5753B	JS00444	JS00444
Q1	1	SCR 2N5062	JS00434	JS00434
Q2	1	TRANSISTOR, 2N5550	JS00489	JS00489
D6,D7,D9	3	DIODE, 1N914	JS00499	JS00499
D1-D5,D8,D10-D14	11	DIODE, 1N4004	JS00500	JS00500
CR	1	METAL OXIDE VARISTOR, V150LA1	JS00758	JS00758
J10	1	JUMPER, -0 OHM RESISTER	NOT REQUIRED	JE00355
J1-J7,J9	8	JUMPER, -0 OHM RESISTER	JE00355	JE00355

TABLE 4-2: 130V DC C12 CONTROL BOARD

CHG'R AMPS	VALUE	PART NO.	ASSY. NO.
3, 25,	NO CAP	----------	MBC03952S
6, 12, 16, 35, 50	.47uF	JC-150	MBC03952SA

5. OPTIONAL ALARMS AND ACCESSORIES

DESCRIPTION		PART NO.
Lightning Arrestor		JS00642
Blocking Diode	3 to 12 AMP 16 AMP 25, 35, 50 AMP	JS00786 JS00667 JS00663
Equalize Timer 0 to 72 Hour		KBC04142-72HR
Equalize Timer 0-30HR with By-Pass Switch		KBC04480-30HR
Equalize Timer 0-72HR with By-Pass Switch		KBC04480-72HR
High/Low Voltage Alarm Relay With Lights		KBC04124-24, 48, 130 KBC04124-24L, 48L, 130L
High Voltage Alarm Relay with Adjustable Time Delay(0-180 Seconds) With Light		KBC04650-24, 48, 130 KBC04650-24L, 48L, 130L
Low Voltage Alarm Relay with Adjustable Time Delay(0-180 Seconds) With Light		KBC04649-24, 48, 130 KBC04649-24L, 48L, 130L
No Charge Alarm Relay and Load Sharing With Light		KBC04125-24, 48, 130 KBC04125-24L, 48L, 130L
Ground Detection Alarm Relay With Light		KBC04130-24, 48, 130 KBC04130-24L, 48L, 130L
Ground Detection Voltmeter Switch		KBC04211
Ground Detection Lights		KBC04210-24V, 48V, 130V
1% Meters		Specify

5.1 LIGHTNING ARRESTER

A surge suppression device connected across the AC service to ground prevents high energy transients from damaging the equipment.

5.2 BLOCKING DIODE

A silicon rectifier inserted into the negative DC output prevents the flow of reverse current from the battery when the equipment is de-energized preventing additional battery drain.

Note: Current drain without blocking diode is typically less than 100MA.

5.3 EQUALIZE TIMER

The unit is equipped with a timer providing up to 255 hours (as specified) of equalize mode operation. When the time cycle is completed, the power supply automatically returns to the float mode.

The equalize timer uses the float-equalize switch in its operation. To initiate the equalize cycle, the switch is moved to the reset position (setting timer for pre-selected equalize cycle) and then returned to the normal position. The equalize cycle can be manually ended by placing the switch in the reset position. The power supply will go through a full timing cycle when the switch is returned to the normal position.

5.4 HIGH AND LOW VOLTAGE ALARM RELAYS DESCRIPTION

FIGURE 5-1: CIRCUIT BOARD LAYOUT

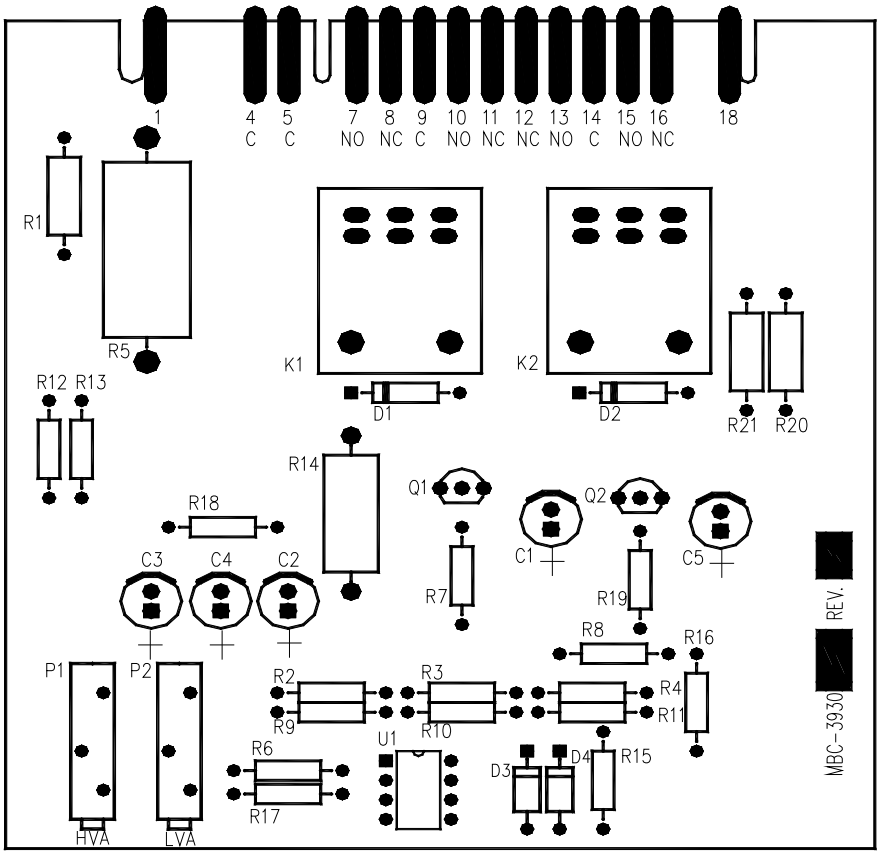

FIGURE 5-2: CONNECTION DIAGRAM "ARE" HIGH AND LOW VOLTAGE ALARM

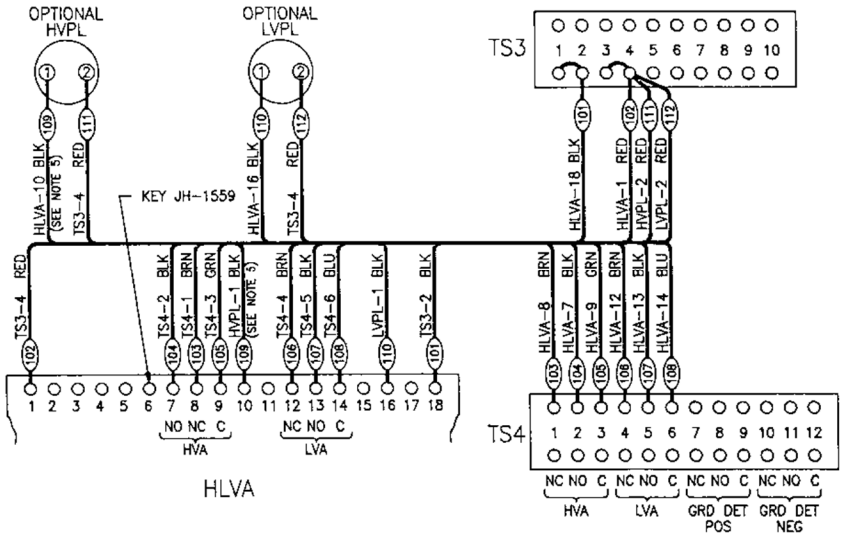

LEGEND:

HLVA	HIGH/LOW VOLTAGE ALARM BOARD
HVPL	HIGH VOLTAGE PILOT LIGHT
LVPL	LOW VOLTAGE PILOT LIGHT
TS3	TERMINAL BLOCK SENSING
TS4	TERMINAL BLOCK CUST. CONTACTS

NOTES:

1. WIRING IS SIZE #18.
2. TS3 IS LOCATED ON THE ACCESSORY PANEL.
3. HVPL & LVPL ARE LOCATED ON THE INSTRUMENT PANEL.
4. TS4 IS LOCATED ON THE BOTTOM OF THE CABINET.
5. IF CUSTOMER REQUIRES HIGH ALARM TO BE SET LESS THAN FLOAT SETTING, MOVE WIRE FROM HLVA TERMINAL 10 TO TERMINAL 11.
6. WIRE NUMBERS USED: 101 THROUGH 112.
7. REFERENCE SCHEMATIC: MBC4039

5.5 HIGH AND LOW VOLTAGE ALARM

This is a dual channel alarm, which monitors the DC output voltage. One form C relay contact for remote indication is available from each channel. For the low voltage alarm, the relay is normally energized and deenergized to indicate a low voltage. For the high voltage alarm, the relay is normally deenergized and energized to indicate high voltage. Both channels operate similarly, thus the alarm may also be used to indicate two low voltage or two high voltage levels. Each form C contact is rated to handle two amperes at 28 volts DC or 120 volts AC. A local alarm light may also be provided for each channel.

5.5.1 Connections

The low voltage form C contact is terminated at terminal strip TS4-4, 5, 6. The common (6) and normally closed (4) contact is closed during an alarm condition. The high voltage form C contact is terminated at TS4-1, 2, 3. The common (3) and normally open (2) contact is closed during an alarm condition.

5.5.2 Adjustment

a. High Voltage Alarm
The high voltage alarm level is set by Potentiometer P/H. Turning P/H clockwise increases the setting.
To check the setting, place the power supply in equalize and slowly increase the output voltage until the alarm is activated, while monitoring the output voltage.
To set the alarm, turn P/H fully clockwise. Place the power supply in equalize and adjust the output voltage at the desired alarm level. Turn P/H counterclockwise until the alarm is activated. Check the setting using the procedure described above.

b. Low Voltage Alarm
The low voltage alarm is set by Potentiometer P/L. Turning P/L clockwise increases the setting.
To check the setting, reduce the DC bus voltage by decreasing the float voltage or by partially discharging the battery, and monitor the bus voltage until the alarm is activated.
To set the alarm, turn P/L fully counterclockwise. Reduce the bus voltage to the desired alarm level. Turn P/L clockwise until the alarm is activated. Check the setting using the procedure described above.

High and Low Voltage Alarm (Dual Channel)

Specifications:	
Adjustment Range	± 20% of 2.2 volts per cell
Contact Rating	2 Amperes at 28 VDC or 120 VAC
Operating Temperature Range	0 C to 65 C
Temperature Coefficient	+ 0.44% per C
Differential – Pickup to Dropout	1%
Current Drain with Low Voltage	5 – 12 mA
Factory Settings: Low Voltage	2.08 volts per cell
High Voltage	2.41 volts per cell

SCHEMATIC:

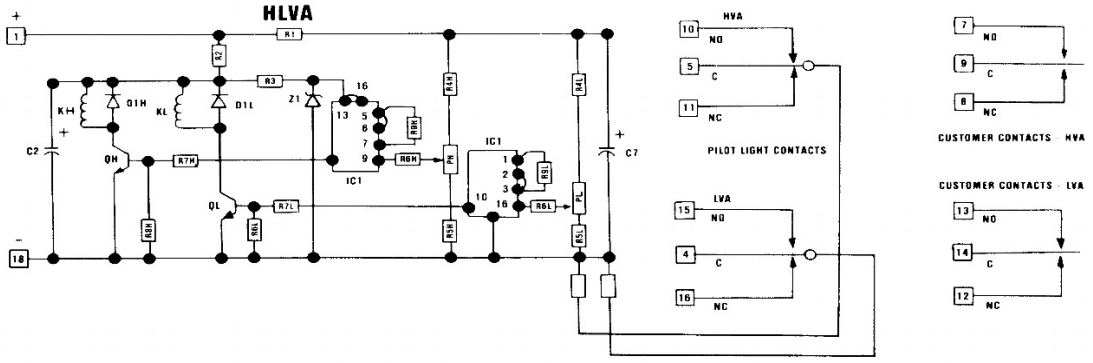

5.6 HIGH VOLTAGE ALARM WITH ADJUSTABLE TIME DELAY

5.6.1 High Voltage Alarm Connection Diagram

This alarm has an adjustable time delay from approximately 1 to 180 seconds. One set of form C contacts are available for remote indication. An optional local alarm light can be provided.

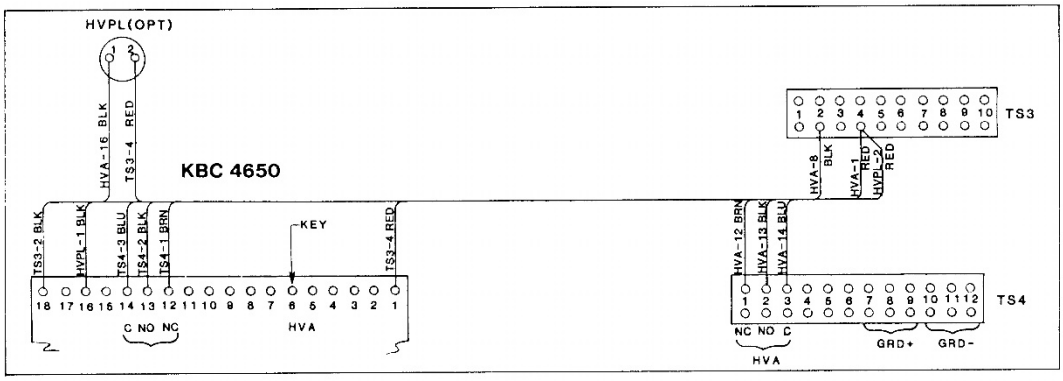

LEGEND:

HVA	HIGH VOLTAGE ALARM BOARD
HVPL	HIGH VOLTAGE PILOT LIGHT
LVPL	LOW VOLTAGE PILOT LIGHT
TS-3	TERMINAL BLOCK SENSING
TS-4	TERMINAL BLOCK CUSTOMER CONNECTIONS

NOTES:

1. ALL WIRING IS SIZE #18.
2. TS3 IS ON ACCESSORY PANEL.
3. PILOT LIGHTS ARE ON INSTRUMENT PANEL.
4. TS4 IS LOCATED ON BOTTOM OF CABINET.

5.6.2 Connections

The high voltage form C contacts are terminated at terminal strip TS4, points 1, 2, & 3.

5.6.3 Operation

Relay is energized under normal conditions. When high voltage conditions occurs relay drops out after desired time delay.

5.6.4 Adjustment Procedure

1. Connect digital voltmeter, 20 VDC scale to + TP & - TP where indicated.
2. Energize power supply and adjust output voltage to desired alarm voltage.
3. Adjust pot R6 clockwise to raise operating point, counterclockwise to lower operating point. Slowly adjust R6 clockwise to cause voltmeter to change abruptly from approximately 6.8V to 0V (high to low); if voltmeter already reads low, adjust R6 counterclockwise to obtain high condition.
4. Check setting by reducing power supply voltage until relay resets then slowly raise voltage until voltmeter reads low. Note that trip is a desired voltage level readjust if necessary.
5. Set pot R14 to desired time delay. Note: Scale on board is approximate time.

5.6.5 Specifications

Adjustment Range	±20% to 2.2 volts per cell
Contact Rating	Maximum current 2A, Maximum voltage 220V AC/DC, Maximum switching power 60W/100VA
Operating Temperature	0 to 65 C
Temperature Coefficient	.02% per C
Differential – Operate to Restore	2% typical
Factory settings – Low Voltage	2.08 volts per cell
Factory settings – High Voltage	2.41 volts per cell
Current Drain: up to 48V System	28MA Relay Deenergized
130 & Higher System	13MA Relay Deenergized

5.7 LOW VOLTAGE ALARM WITH ADJUSTABLE TIME DELAY

This alarm has an adjustable time delay form approximately 1 to 180 seconds. One set of form C contacts are available for remote indication. An optional local alarm light can be provided.

5.7.1 Low Voltage Alarm Connection Diagram

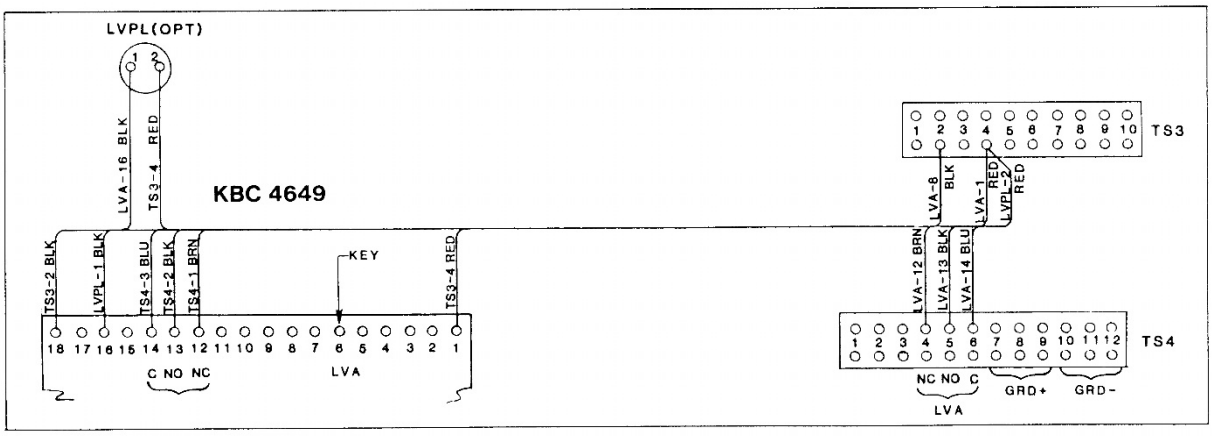

5.7.2 Connections

The low voltage form C contacts are terminated at terminal strip TS4, points 4, 5, & 6.

5.7.3 Operation

Relay is energized under normal conditions. When low voltage condition occurs relay drops out after desired time delay.

5.7.4 Adjustment Procedure

1. Connect digital voltmeter, 20VDC scale to +TP and –TP where indicated.
2. Energize power supply and adjust output voltage to desired alarm voltage.
3. Adjust pot R6 clockwise to raise operating point, counterclockwise to lower operating point. Slowly adjust R6 clockwise to cause voltmeter change abruptly from approximately 0V to 6.8V (low to high); if voltmeter already reads high, adjust R6 counterclockwise to obtain low condition.
4. Check setting by raising power supply voltage until relay resets then slowly decrease voltage until voltmeter reads high. Note that trip is at desired voltage level. Readjust if necessary.
5. Set pot R14 to desired time delay. Note: Scale on board is approximate time.

5.7.5 Specifications Same as High Voltage Alarm With Time Delay

FIGURE 5-3: HIGH OR LOW DC VOLTAGE ALARM WITH ADJUSTABLE TIME DELAY

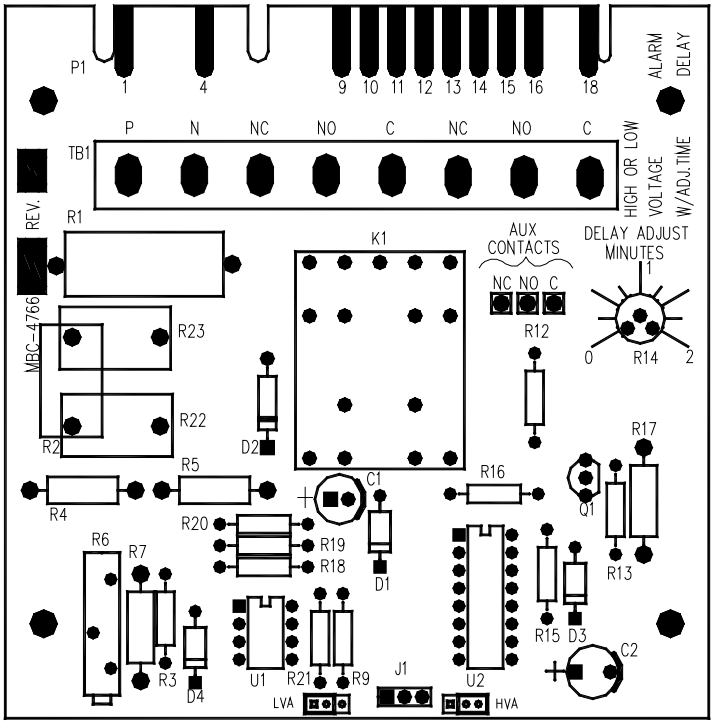

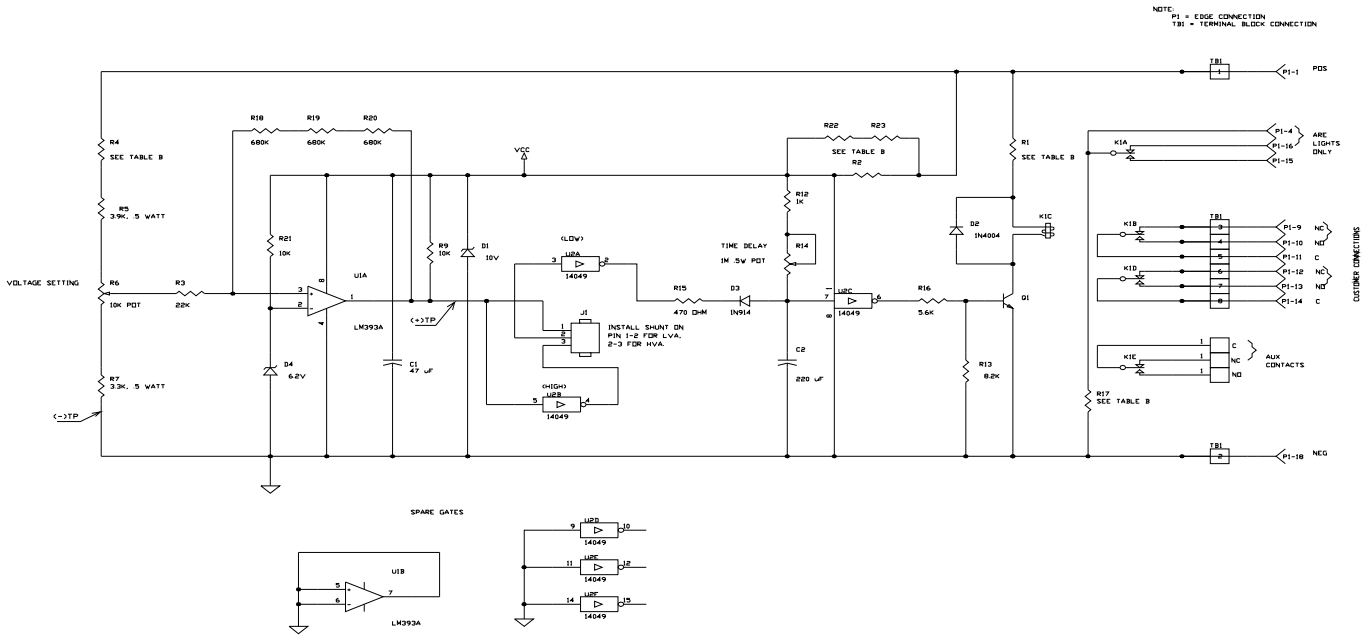

5.8 NO CHARGE ALARM RELAY AND LOAD SHARING

5.8.1 Description

5.8.1.1 No Charge Alarm (Low Current Alarm)

This alarm monitors the output current. One form C relay contact for remote indication is provided. The relay de-energizes during an alarm condition (low current). The form C contact is rated to handle one ampere at 28 volts DC or 120 volts AC. A local alarm light may also be supplied.

5.8.1.2 Load Sharing

Load sharing allows two or more power supplies connected in parallel to share the load in proportion to their ratings. The power supplies will share the load within 5% of the rating of the largest unit between 10% and 100% of their ratings. The load sharing is connected through the no charge alarm, which disconnects the load sharing should one charger shut off.

5.8.2 Connections

A. The No Charge Alarm form C contact is terminated at TS7-2, 3, 4. The common (4) and normally closed (2) contact is closed during a low current condition.

B. For load sharing connect all units which are to share the load to the system bus using equal lengths of properly sized cables from output of each power supply. Connect #18 AWG insulated wire from TS7-1(LS) of charger A to TS7-1(LS) of charger B.

5.8.3 Adjustment

A. The No Charge Alarm is set by potentiometer P2 on the printed circuit board. Turning P2 clockwise increases the current at which the alarm activates. To check the alarm setting, slowly reduce the power supply output current by reducing the load or the output voltage until the alarm activates. To set the alarm, turn P2 counterclockwise. Adjust the output current to the desired alarm setting. Turn P2 clockwise until the alarm activates. In order for the load sharing to operate properly, the No Charge Alarm must be set close to zero current.

B. Load Sharing:Turn on only one unit at a time and adjust the output voltage to the desired level using a digital voltmeter. Connect a digital voltmeter positive lead to the power supply positive output and the negative lead to TS7-1(LS). Adjust potentiometer P1 on the alarm board for 5.0VDC at zero output current.

5.8.4 For Two Power Supplies

Turn on both units. Add some load to the system and adjust P1 on the unit with lower output to match the output of the other unit. For best results the load should be between 50% and 100% of the combined rating of the equipment.

5.8.5 For More Than Two Power Supplies

Start by adjusting two of the units then add the rest of the units one at a time, adjusting P1 on each added unit until all units are sharing the load.

5.8.6 Operational Notes

1. Load sharing is not intended to be effective below 10% of rated output. Operation below 10% may result in unequal outputs or loss of output current form one of the units. It is recommended that where paralleled units are being used to float a battery before the system load is installed, only one unit be left operating.
2. Occasional minor movements in the panel ammeter pointer may occur when paralleled units are operated at light loads. This is an indication of the transfer of small currents between units and does not show up at the load.
3. It is possible for hunting to occur if the output voltages are mis-adjusted. Repeat Step B under “Adjustment”.

5.8.7 Specifications

A. No Charge Alarm

Contact Ratings	1 Ampere at 28 Volts DC or 120 Volts AC
Pickup/Dropout Differential	3%
Time Delay on Pickup	None
Operating Temperature Range	0 C to 65 C

Temperature Coefficient	± 10 µV/C
Current Drain	20 mA relay deenergized
	60 mA relay energized

B. Load Sharing

Operating Range	10% to 100% load
Tracking	5% of largest power supply rating

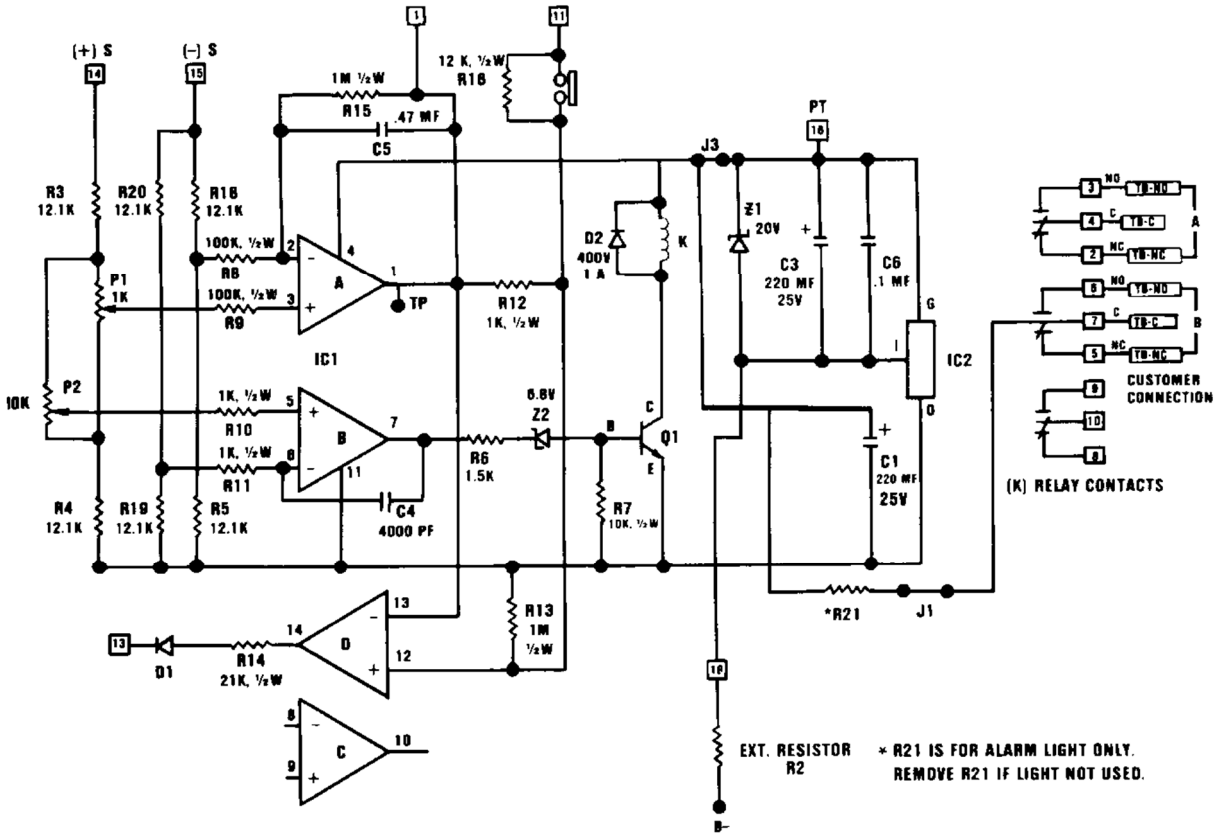

TABLE ONE **TABLE TWO**

EXTERNAL RESISTANCE (REF. ONLY)				R21				LIGHT (REF. ONLY)
VOLTS	OHMS	WATTS	PART NO.	VOLTS	OHMS	WATTS	PART NO.	PART NO.
12	-	-	-	12	-	-	-	-
24	200	5.25	JE00009	24	JUMPER	-	JW00277	JL00698
48	750	5.25	JE00337	48	680	2.0	JE00187	JL00698
130	3000	8	JE00076	130	10K	0.5	JE00111	JL00696

FIGURE 5-4:NO CHARGE ALARM WITH LOAD SHARING CIRCUIT BOARD

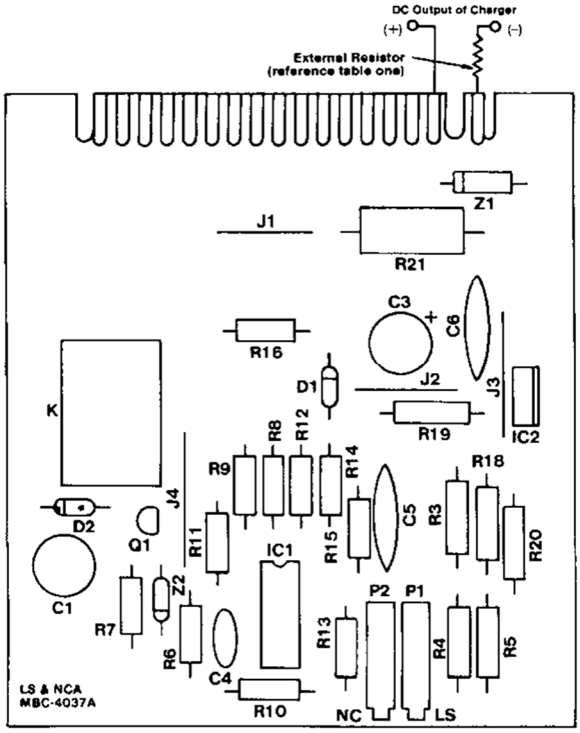

FIGURE 5-5: CONNECTION DIAGRAM "ARE" NO CHARGE ALARM WITH LOAD SHARING

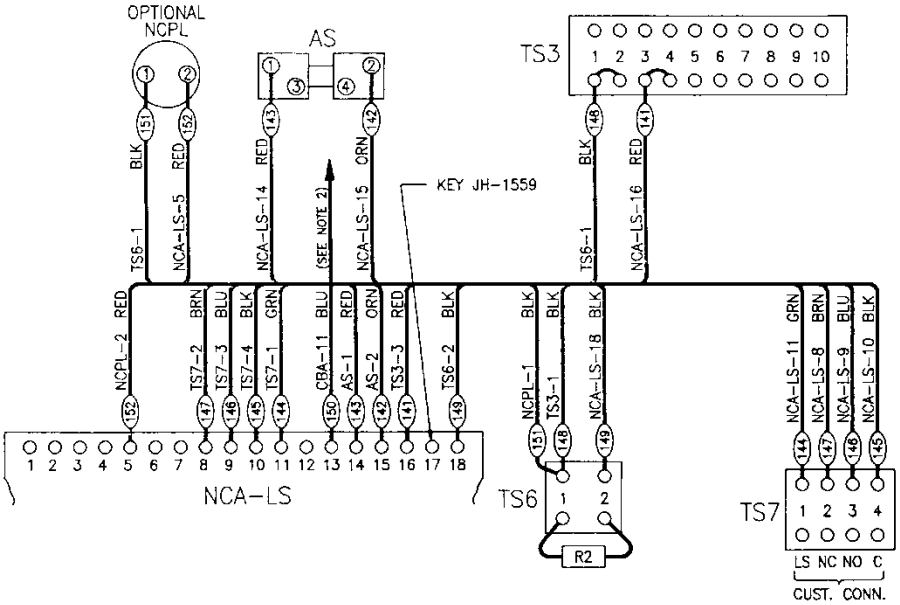

LEGEND:

AS	AMMETER SHUNT
NCA-LS	NO CHARGE ALARM WITH LOAD SHARING
NCPL	NO CHARGE ALARM PILOT LIGHT
TS3	TERMINAL BLOCK, SENSING
TS6	TERMINAL BLOCK, EXTERNAL RESISTOR
TS7	TERMINAL BLOCK, CUT. CONNECTION

NOTES:

1. ALL WIRING IS SIZE #18.
2. PIN 13 OF NCA-LS IS CONNECTED TO PIN 11 OF THE "ARE" CONTROL BOARD.
3. TS3 & EXTERNAL AS "ARE" LOCATED ON THE ACCESSORY PANEL.
4. TS6 & TS7 ARE LOCATED ON THE OPTION PANEL.
5. WIRE NUMBERS USED: 141 THROUGH 152.
6. REFERENCE: SCHEMATIC MBC-4047.
7. NCPL AND INTERNAL (PART OF AMMETER) AS ARE LOCATED ON THE INSTRUMENT PANEL.

5.9 GROUND DETECTION ALARM RELAY (WITH LIGHTS)

5.9.1 Description

This alarm senses any ground, which may occur on the positive or negative battery terminal. One form C relay contact for remote indication is available for positive and negative ground detection. The relay(s) energize(s) during an alarm condition. The form C contact is rated to handle two amperes at 28 volts DC or 120 volts AC. A local alarm light may be supplied to indicate a positive or negative ground.

5.9.2 Connections

The positive ground form C contact is terminated at TS4-7, 8, 9. The common (9) and normally open (8) contact is closed during an alarm condition. The negative ground form C contact is terminated at TS4-10, 11, 12. The common (12) and normally open (11) contact is closed during an alarm condition. Adjustment: None.

5.10 GROUND DETECTION VOLTMETER SWITCH

5.10.1 Description

A double-pole, double-throw momentary switch with a center off positive is used with the DC voltmeter. Placing the switch in the POS or NEG test position connects that respective voltmeter polarity to ground.

5.10.2 Operation

If no ground exists, the voltmeter will read zero (0) volts when placed in either test position. If a ground does exist, the voltmeter will read some voltage up to full bus voltage, depending on the amount of resistance to ground. If the ground is solid (zero resistance), the voltmeter will read full bus voltage. As the resistance to ground increases, the voltage read by the voltmeter will decrease.

5.11 GROUND DETECTION LIGHTS

5.11.1 Description

A light is connected from each power supply output (positive and negative) to cabinet ground.

5.11.2 Operation

If no ground fault exists, the lights are dimly illuminated. If a ground fault does exist, one of the lights will illuminate to greater brightness. The degree of brightness depends on the ground resistance.

FIGURE 5-6: CONNECTION DIAGRAM "ARE" GROUND DETECTION ALARM

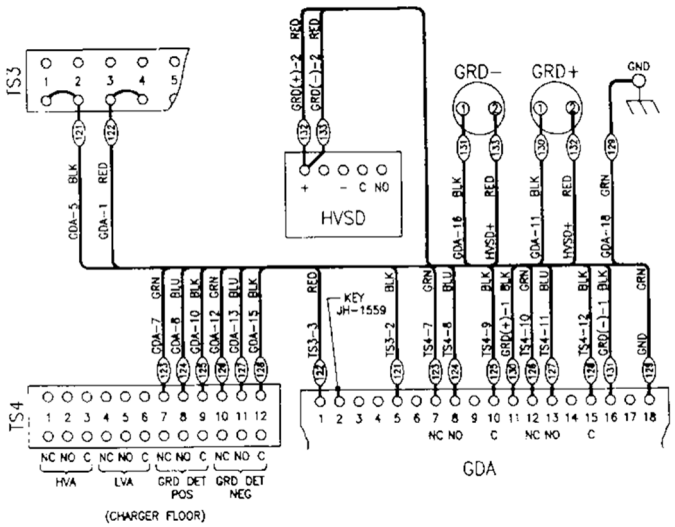

LEGEND:

GDA	GROUND DETECTION ALARM BOARD
GRD-	GROUND DETECTION LIGHT (NEGATIVE)
GRD+	GROUND DETECTION LIGHT (POSITIVE)
HVSD	HIGH VOLTAGE SHUTDOWN BOARD
TS3	TERMINAL BLOCK, SENSING
TS4	TERMINAL BLOCK, CUST. CONNECTION

NOTES:

1. ALL WIRING IS SIZE #18.
2. TS3 AND TS4 ARE LOCATED ON THE ACCESSORY PANEL.
3. GRD- AND GRD+ ARE LOCATED ON THE INSTRUMENT PANEL.
4. WIRE NUMBERS USED: 121 THROUGH 133.
5. REFERENCE SCHEMATIC: MBC-4091.

FIGURE 5-7: GROUND DETECTION ALARM RELAY

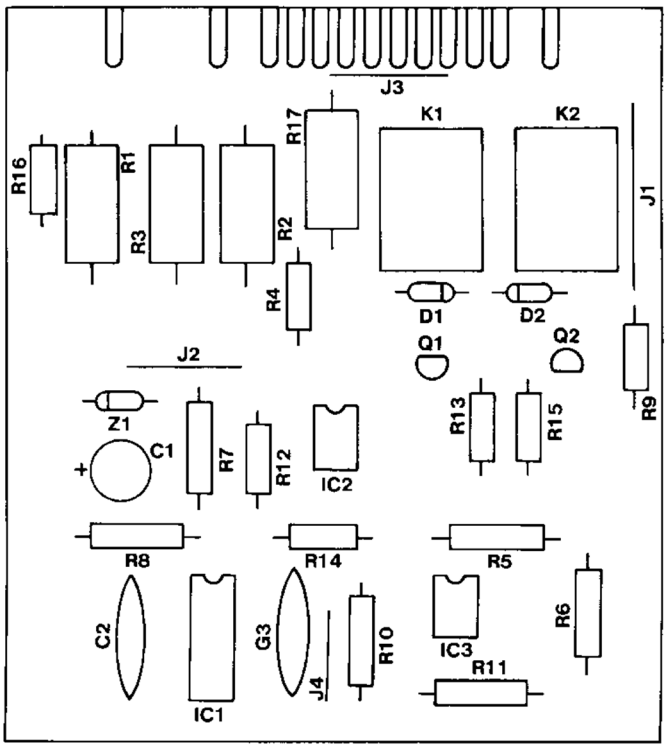

FIGURE 5-8: GROUND DETECTION ALARM SCHEMATIC DIAGRAM

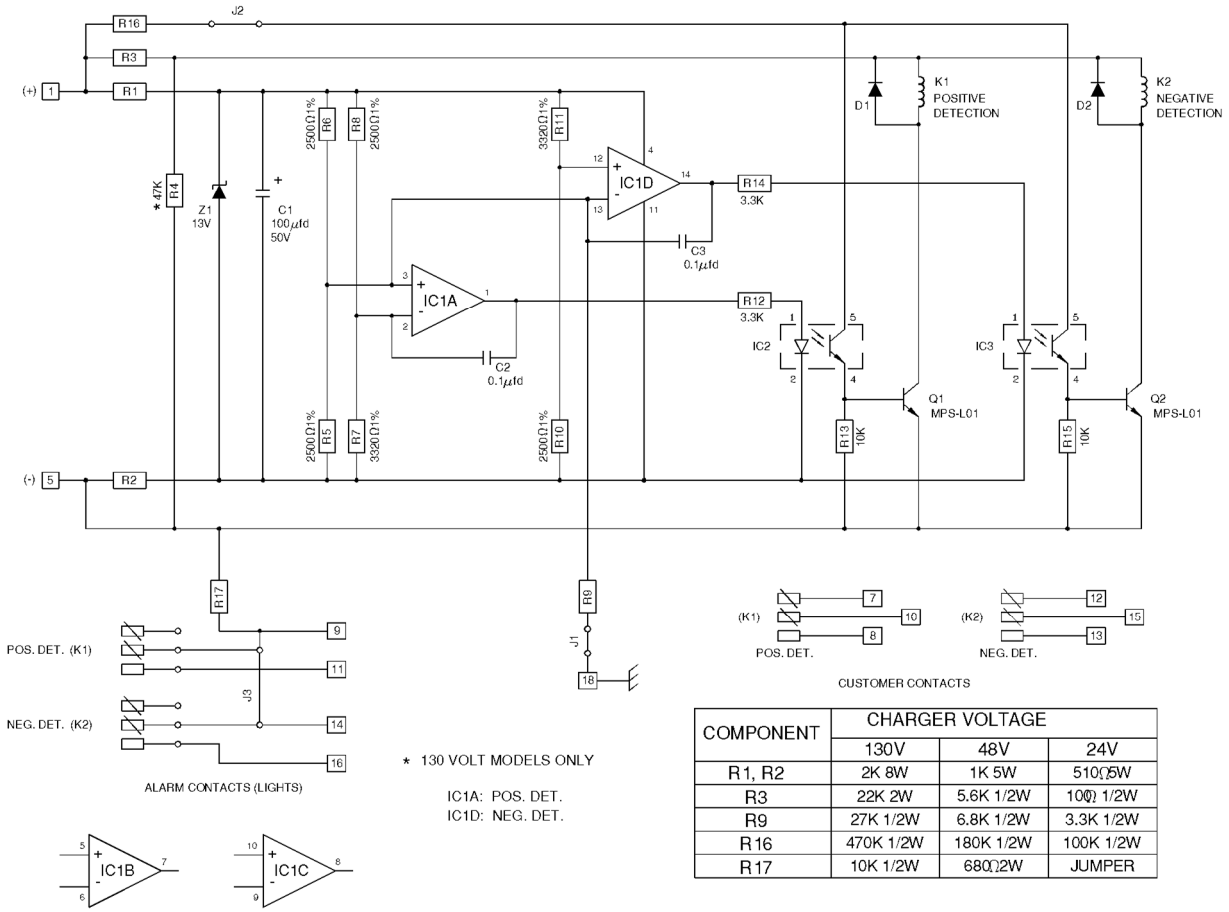

COMPONENT	CHARGER VOLTAGE		
	130V	48V	24V
R1, R2	2K 8W	1K 5W	510Ω5W
R3	22K 2W	5.6K 1/2W	100Ω 1/2W
R9	27K 1/2W	6.8K 1/2W	3.3K 1/2W
R16	470K 1/2W	180K 1/2W	100K 1/2W
R17	10K 1/2W	680Ω2W	JUMPER

FIGURE 5-9:GROUND DETECTION (GROUND LIGHTS ONLY, KBC-4210)

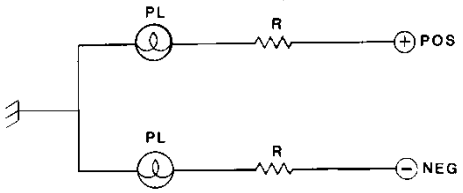

FIGURE 5-10: ASSEMBLY AND CONNECTION DIAGRAM GROUND DETECTION LIGHTS WITH SWITCH

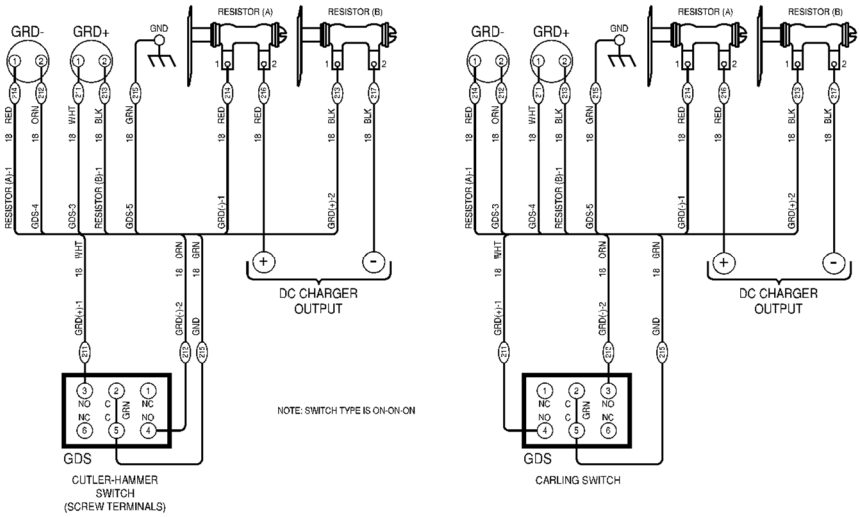

FIGURE 5-11: GROUND LIGHTS WITH CENTER OFF MOMENTARY SWITCH AND LAMP TEST(KBC-4429)

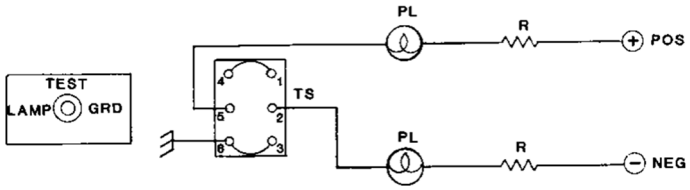

FIGURE 5-12: ASSEMBLY AND CONNECTION DIAGRAM ARE SINGLE-PHASE VOLTMETER GROUND DETECTION SWITCH

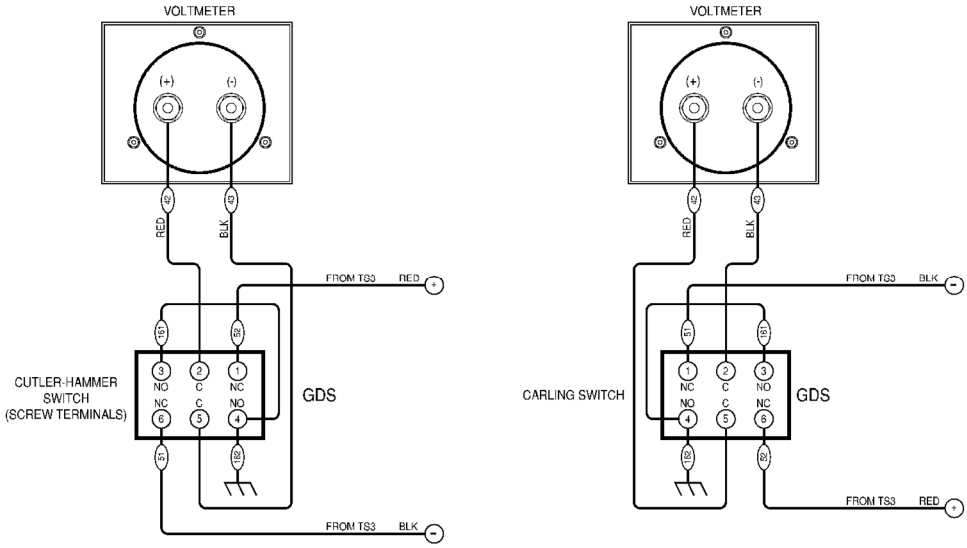

FIGURE 5-13: LIGHTNING ARRESTER CONNECTIONS

120 – volt AC Connection

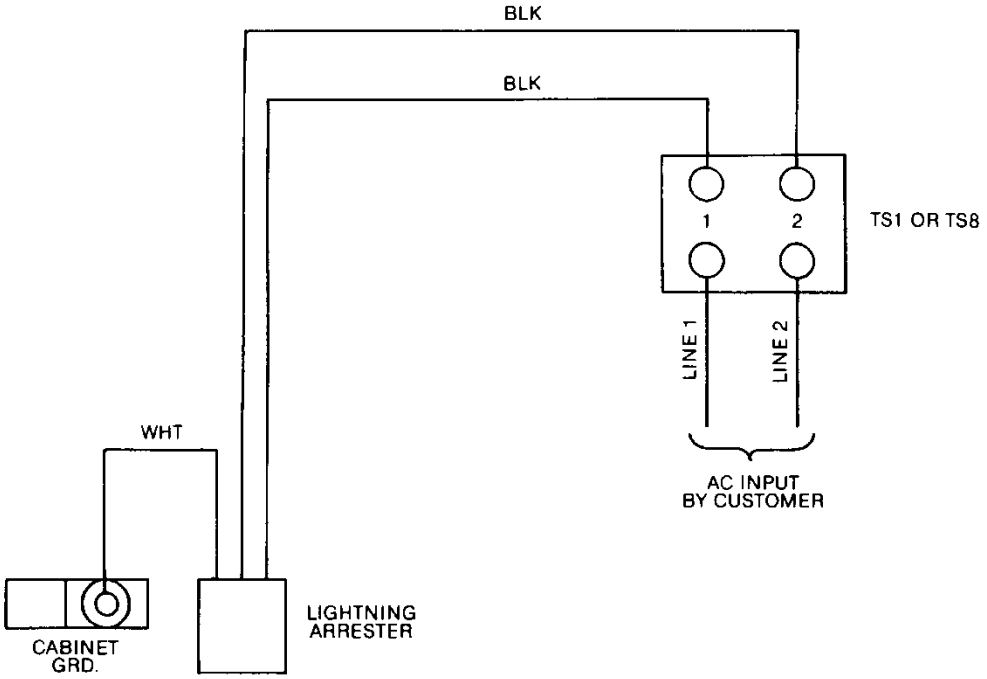

208/240 & 480 – volt AC Connection

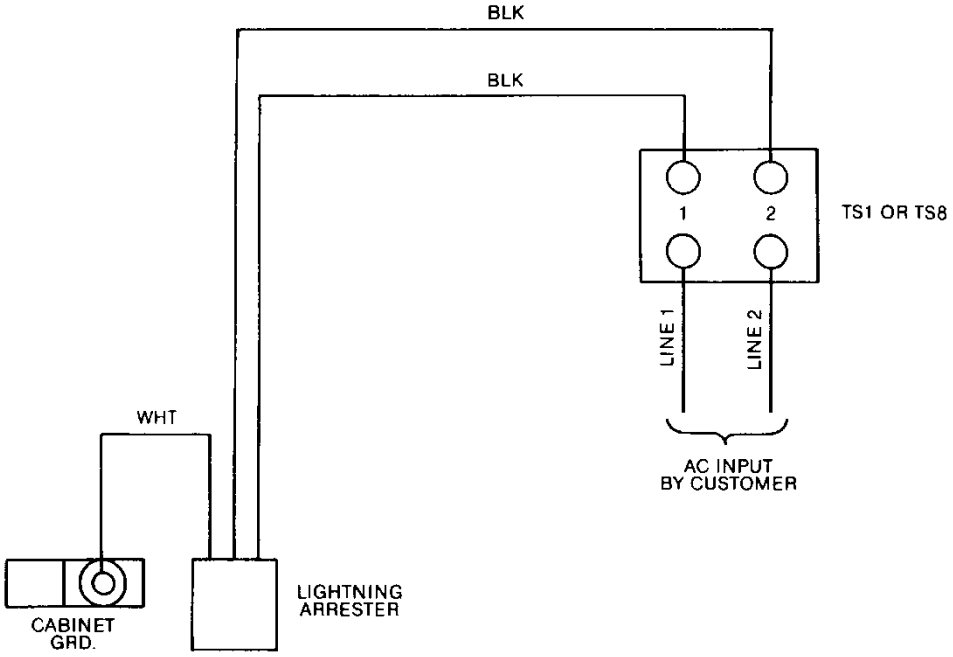

FIGURE 5-14: BLOCKING DIODE ASSEMBLY

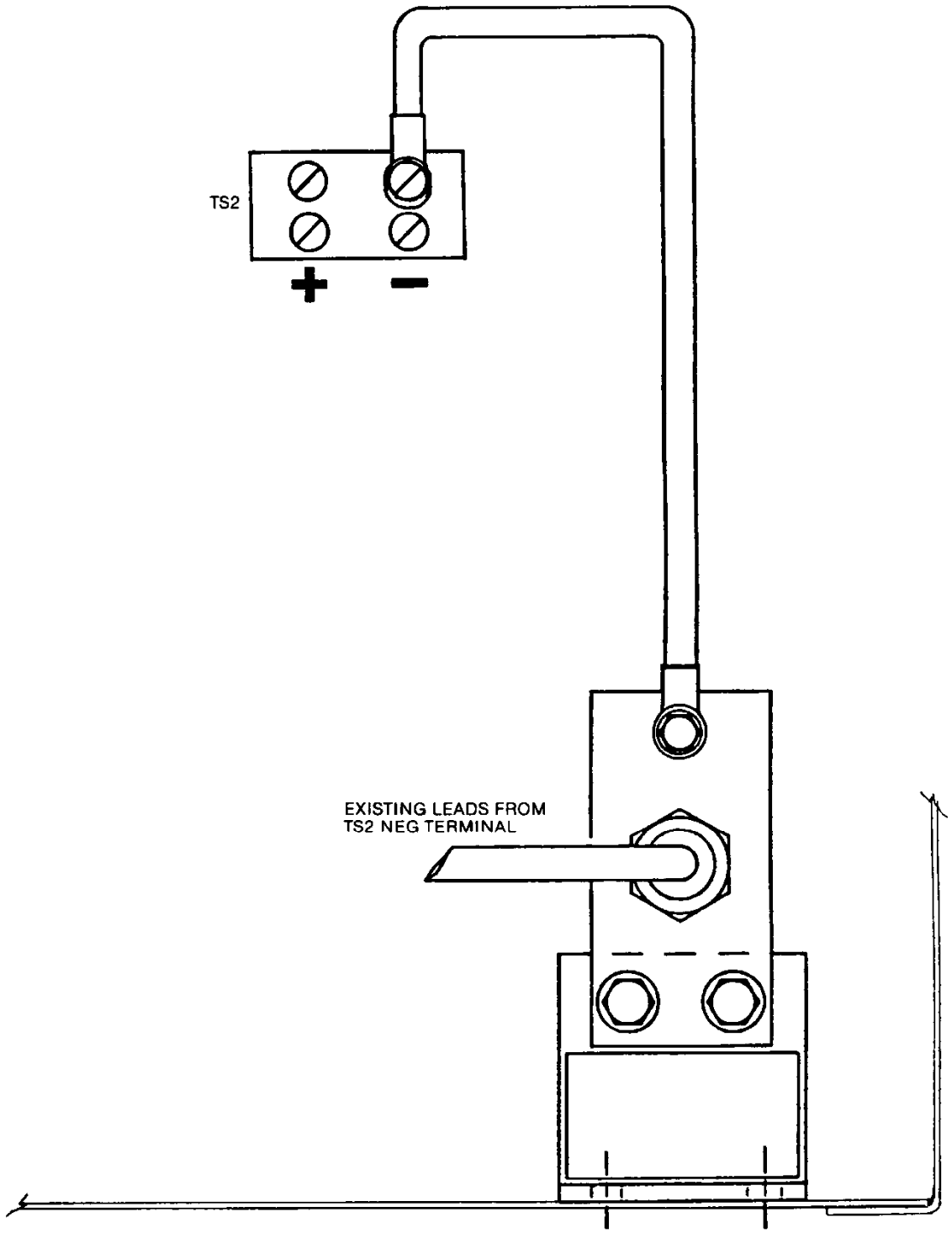

FIGURE 5-15: ASSEMBLY AND CONNECTION DIAGRAM EQUALIZE TIMER

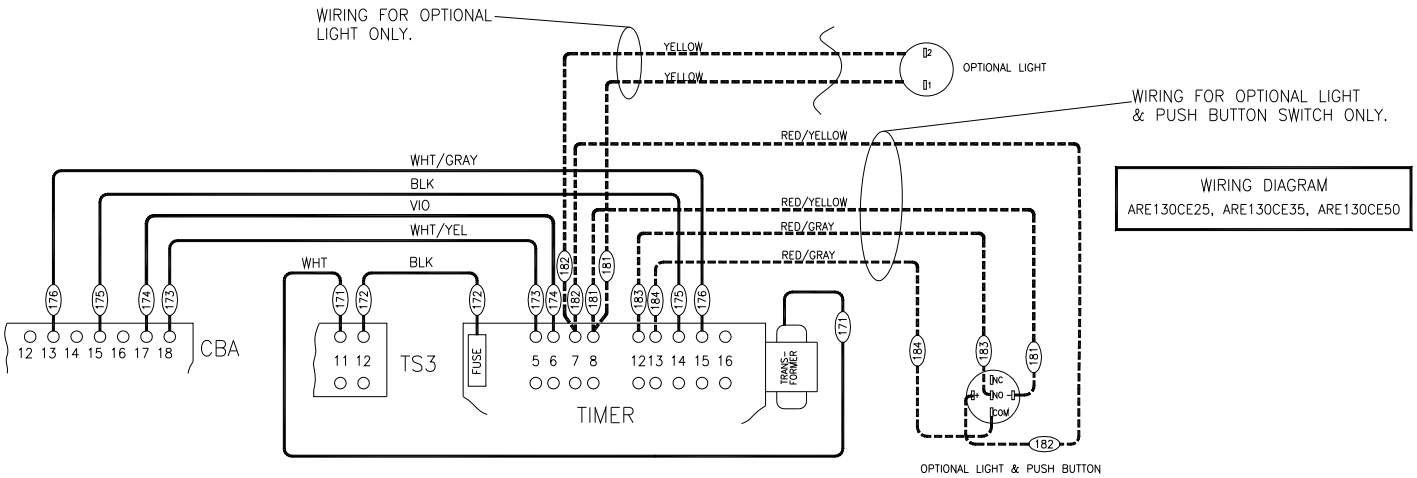

FIGURE 5-16: ASSEMBLY AND CONNECTION DIAGRAM EQUALIZE TIMER (CONTINUE)

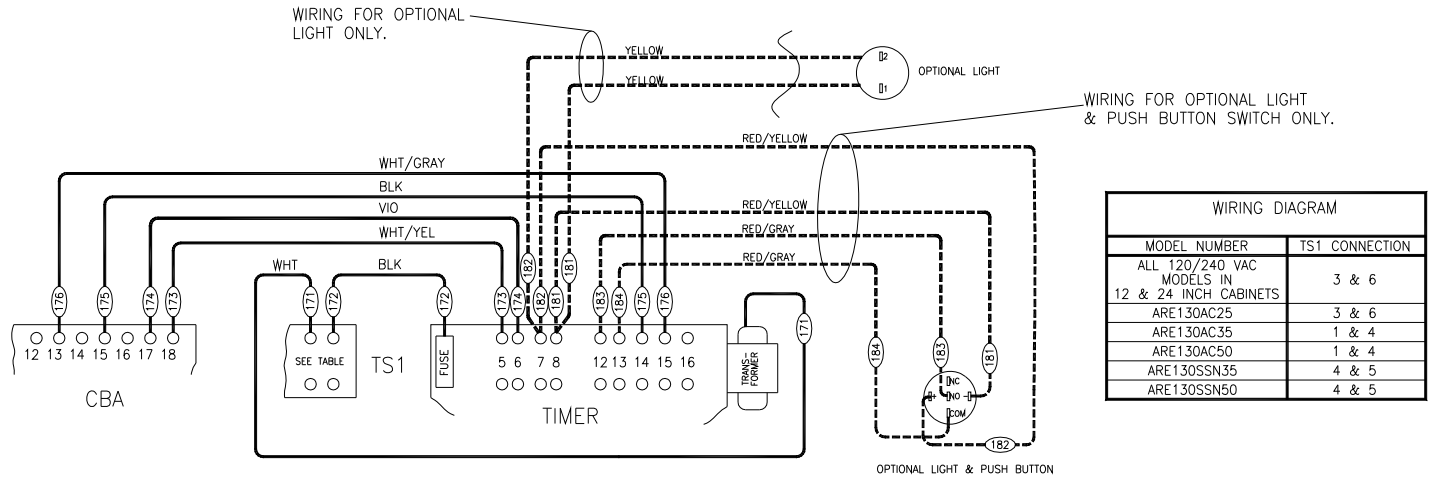

WIRING DIAGRAM

MODEL NUMBER	TS1 CONNECTION
ALL 120/240 VAC MODELS IN 12 & 24 INCH CABINETS	3 & 6
ARE130AC25	3 & 6
ARE130AC35	1 & 4
ARE130AC50	1 & 4
ARE130SSN35	4 & 5
ARE130SSN50	4 & 5

NOTES: (FIGURES 5-15 & 5-16)

1. ALL WIRING IS SIZE #18.
2. WIRE NUMBERS USED: 171 THROUGH 176.
3. TIME MAY BE SUPPLID WITHOUT OPTIONAL LIGHT OR OPTIONAL LIGHT & PUSH BUTTON SWITCH.
4. SWITCH 240.2710.10 SHOWN.

5.12 EQUALIZE TIMER SETTING INFORMATION

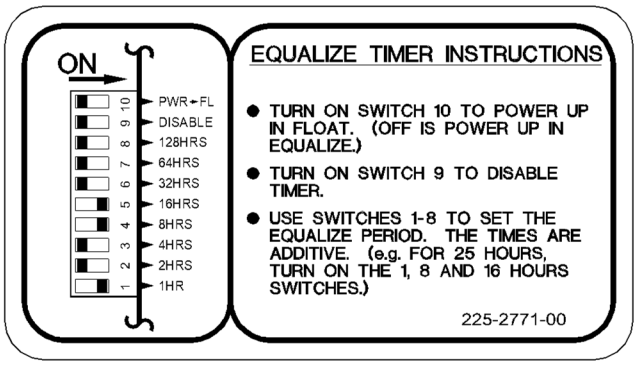

6. SPECIFICATIONS "ARE" SINGLE-PHASE RECTIFIERS

6.1 GENERAL

The single-phase "ARE" is a controlled ferroresonant rectifier, which is designed to float charge a battery while supplying a load.

6.2 DC OUTPUT RATINGS

6.2.1 Current and Voltage Ratings

See table in section 6.7

6.2.2 Regulation

(A). STATIC: The steady state output voltage remains within ±1/2 percent of any voltage within the range of 2.00 to 2.29 volts per cell for loads from 100 percent of rating over the range of input voltage, frequency, and operating temperatures specified below.

(B). DYNAMIC: The maximum voltage excursion does not exceed ± five percent of the setting for a step load change of 20 to 100 percent or 100 to 20 percent rated current. The rectifiers recovers to regulation range within 200 milliseconds and all transient behavior disappears within 500 milliseconds.
Filtering: See Table in section 6.7.

6.3 AC INPUT RATINGS

Input Voltages: See table in section 6.7
Frequency: 57 to 63 Hertz
Typical Data: See General Specifications

6.4 STANDARD FEATURES

Input Protection: AC Circuit Breaker-See parts list for rating.

Output Protection

(A). DC Circuit Breaker (two pole): See parts list for rating.

(B). CURRENT LIMITING: The current limiting is factory set at 110 percent of the full load rating. This is the maximum continuous rating of the rectifier. Current limit is adjustable from 50 percent to 125 percent of the rectifier rating. Operation above 110 percent is for limited periods only.

(C). HIGH VOLTAGE SHUTDOWN: If the rectifier output voltage exceeds the factory setting shown on the table, the rectifier will be deenergized.

Eliminator Filtering: 30 millivolts rms (24 and 48 volt units) and 100 millivolts rms (130 volt units).

Current Walk-in: The output current is gradually increased to 100 percent of full load in no less than ten seconds.

Meters: Both ammeter and voltmeter are 3 ½" D'Arsonval type with two percent accuracy. One percent meters are optional.

AC Power Failure Relay: Two sets form C contacts for customer usage.

6.5 ENVIRONMENTAL RATINGS

Ambient Temperature: 0 °C to 50 °C up to 3,000 feet
Storage Temperature Range: -40 °C to +85 °C
Relative Humidity: 0 to 95 percent, without condensation
Altitude: Up to 10,000 feet, derated for 50 °C
Heat Dissipation: See Table in 6.7
Audible Noise: The audible noise measured at a distance of five feet from any vertical surface does not exceed 65dBA.

6.6 OPTIONAL EQUIPMENT

No Charge Alarm: Signals when the DC current falls below a preset value. Indicator light optional.

Load Sharing: Furnished as part of the no charge alarm. Circuitry is provided which will proportionally divide the load between two or more rectifiers within ± five percent of the current rating of the largest unit from 10 percent to 100 percent of that rating.

High and Low DC Voltage Alarm: Signals when a preset high or low DC voltage condition occurs. Indicator light optional.

High or Low DC Voltage Alarm with adjustable time delay of 1 to 180 seconds. Indicator light optional.

Ground Detector Alarm Relay: Signals when a ground occurs, providing means of remote indication. Indicator lights optional.

Ground Lights: Positive and negative ground indicator lights indicate ground.

Ground Lights with Test Switch: Momentary test switch with center off permits checking of positive and negative individually.
Ground Lights with Lamp Test Switch: Momentary test switch with center off permits checking grounds on both positive and negative simultaneously. Opposite side of switch permits testing for indicator light failure.

Voltmeter Ground Detector Switch: Momentary center off switch permits testing for positive and negative grounds through the DC voltmeter.

0 – 255 Hour Equalize Timer
Blocking Diode
Lightning Protective Device
One Percent Voltmeter and Ammeter

6.7 "ARE" SINGLE-PHASE GENERAL SPECIFICATIONS

MODEL	DC VOLTS	DC AMPS	NO. CELLS	AC VOLTS	AC AMPS	FLOAT RANGE	EQUALIZE RANGE	RIPPLE MV (RMS) ON BATT.	RIPPLE MV (RMS) OFF BATT.	HVSD SETTING	BTU/HR HEAT DISSIPATION
ARE24AC6E	24	6	12	120/208/240	2/1.1/1	24-27	FL-30	-	30	30	65
ARE24AC12E	24	12	12	120/208/240	4/2.3/2	24-27	FL-30	-	30	30	130
ARE48AC6E	48	6	24	120/208/240	4/2.3/2	48-55	FL-60	-	30	60	130
ARE48AC12E	48	12	24	120/208/240	7/4/3.5	48-55	FL-60	-	30	60	260
ARE130AC6F	120	6	60	120/208/240	8.5/5/4	120-138	FL-150	30	100	150	325
ARE130AC12F	120	12	60	120/208/240	18/10/9	120-138	FL-150	30	100	150	650
ARE130CE12F	120	12	60	208/240/480	10/8.8/4.4	120-138	FL-150	30	100	150	650
AFE130AC16F	120	16	60	120/208/240	22/13/11	120-138	FL-150	30	100	150	870
ARE130AC25F	120	25	60	120/208/240	35/20/17	120-138	FL-150	30	100	150	1355
ARE130CE25F	120	25	60	208/240/480	20/17/8.5	120-138	FL-150	30	100	150	1355
ARE130AC35F	120	35	60	120/208/240	50/29/25	120-138	FL-150	30	100	150	1900
ARE130CE35F	120	35	60	208/240/480	29/25/12.5	120-138	FL-150	30	100	150	1900
ARE130CE50F	120	50	60	208/240/480	40/35/17.5	120-138	FL-150	30	100	150	2710

MODEL	AC BREAKER INTERRUPTING CAPACITY
ARE24AC6E	1,000
ARE24AC12E	1,000
ARE48AC6E	1,000
ARE48AC12E	1,000
ARE130AC6F	1,000
ARE130AC12F	1,000
ARE130CE12F	5,000
ARE130AC16F	1,000
ARE130AC25F	14,000
ARE130CE25F	14,000
ARE130AC35F	14,000
ARE130CE35F	14,000
ARE130CE50F	14,000

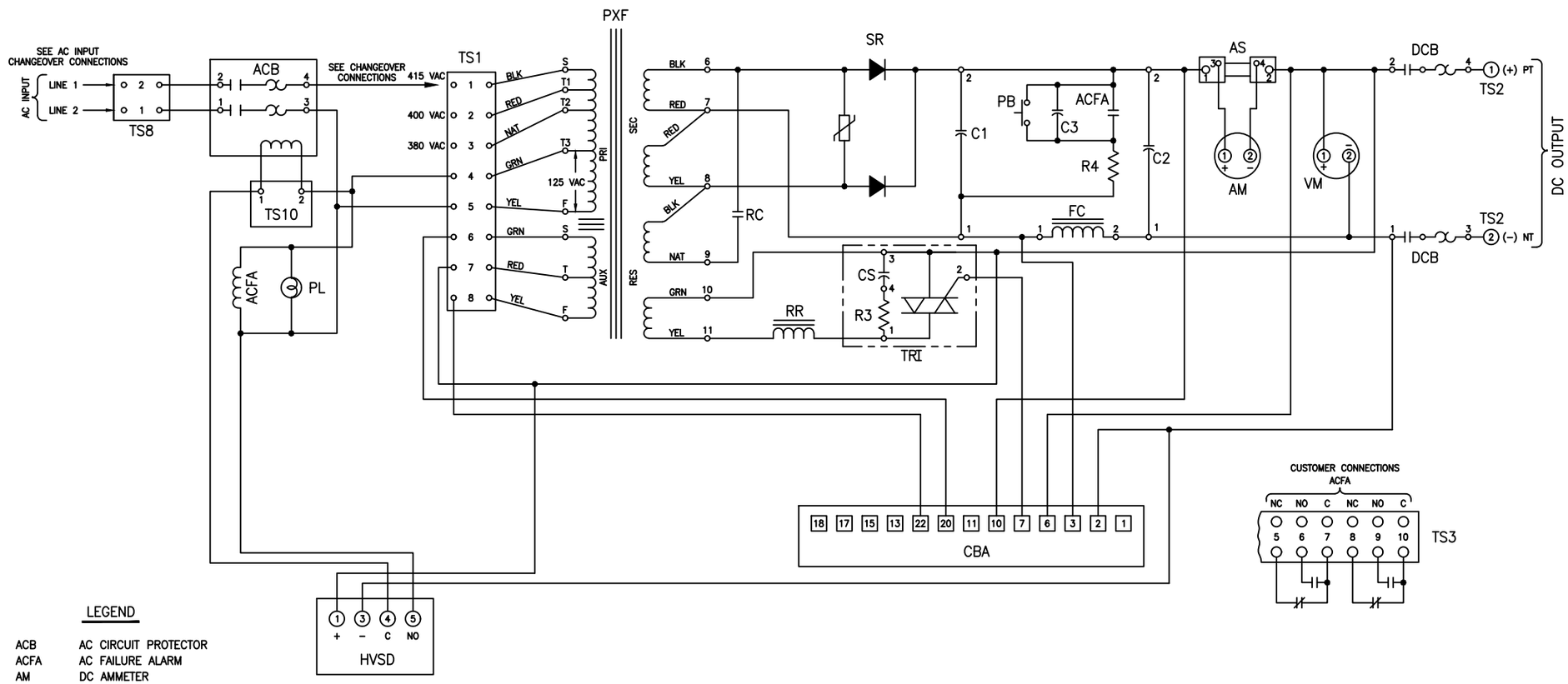

LEGEND

ACB	AC CIRCUIT PROTECTOR
ACFA	AC FAILURE ALARM
AM	DC AMMETER
AS	AMMETER SHUNT
CBA	CONTROL BOARD
C1–C2	FILTER CAPACITOR
C3	CAPACITOR, DAMPENING
DCB	DC CIRCUIT BREAKER
FC	FILTER CHOKE
GND	GROUND TERMINAL
HVSD	HIGH VOLTAGE SHUTDOWN
PB	CAPACITOR DISCHARGE PUSH BUTTON
PL	AC PILOT LIGHT
PXF	POWER TRANSFORMER
RC	RESONANT CAPACITOR
RR	RESONANT REACTOR
R4	RESISTOR, STABILIZER
SP	SURGE PROTECTOR
SR	RECTIFIER
TRI	TRIAC ASSEMBLY
TS1	TERMINAL STRIP, PXF PRI
TS2	TERMINAL STRIP, DC OUTPUT
TS3	TERMINAL STRIP, CUST. CONN.
TS8	TERMINAL STRIP, AC INPUT
TS9	TERMINAL STRIP, BALLAST
TS10	TERMINAL STRIP ACB
VM	DC VOLTMETER

CHANGEOVER CONNECTIONS	
380 VAC	ACB–4 TO TS1–3
400 VAC	ACB–4 TO TS1–2
415 VAC	ACB–4 TO TS1–1

NOTE: SEE INSTRUCTION MANUAL FOR ALL PRINTED CIRCUIT BOARD SCHEMATICS.

ISSUES

ISSUE #	DESCRIPTION	ISS. BY ISS. DATE
2	SEE PCO# 44445	WD 6/22/17

UNLESS OTHERWISE SPECIFIED DIMENSIONS ARE IN INCHES ± TOLERANCES ON:		APPROVALS	DATE
HOLES	+0.004 −0.002	DRAWN KEL	10/8/99
FRACTIONS	±1/32	CHECKED DBW	10/8/99
DECIMALS (XX)	±0.020	APPROVED MCM	10/8/99
DECIMALS (XXX)	±0.010	APPROVED	
ANGLES	±1/2°		

SQUARE CORNERS AND ANGLES ARE 90° UNLESS OTHERWISE SPECIFIED.

WORKMANSHIP:
PER SPEC ENG032

MATERIAL:

FINISH:

PROPRIETARY INFORMATION
NOT TO BE COPIED, USED, TRANSMITTED, OR DISCLOSED WITHOUT PRIOR WRITTEN PERMISSION FROM UNIPOWER, LLC.

UNIPOWER
POWERING TECHNOLOGY

SCHEMATIC DIAGRAM 380/400/415 VAC, 50Hz ARE CHARGER

SIZE	DOC TYPE / NUMBER	ISSUE
B	KBC05799	2

SCALE:	SHEET:	FILE NAME:
N/A	1 OF 1	KBC5799_ISS_2

ED991-5001-B1 Issue 3

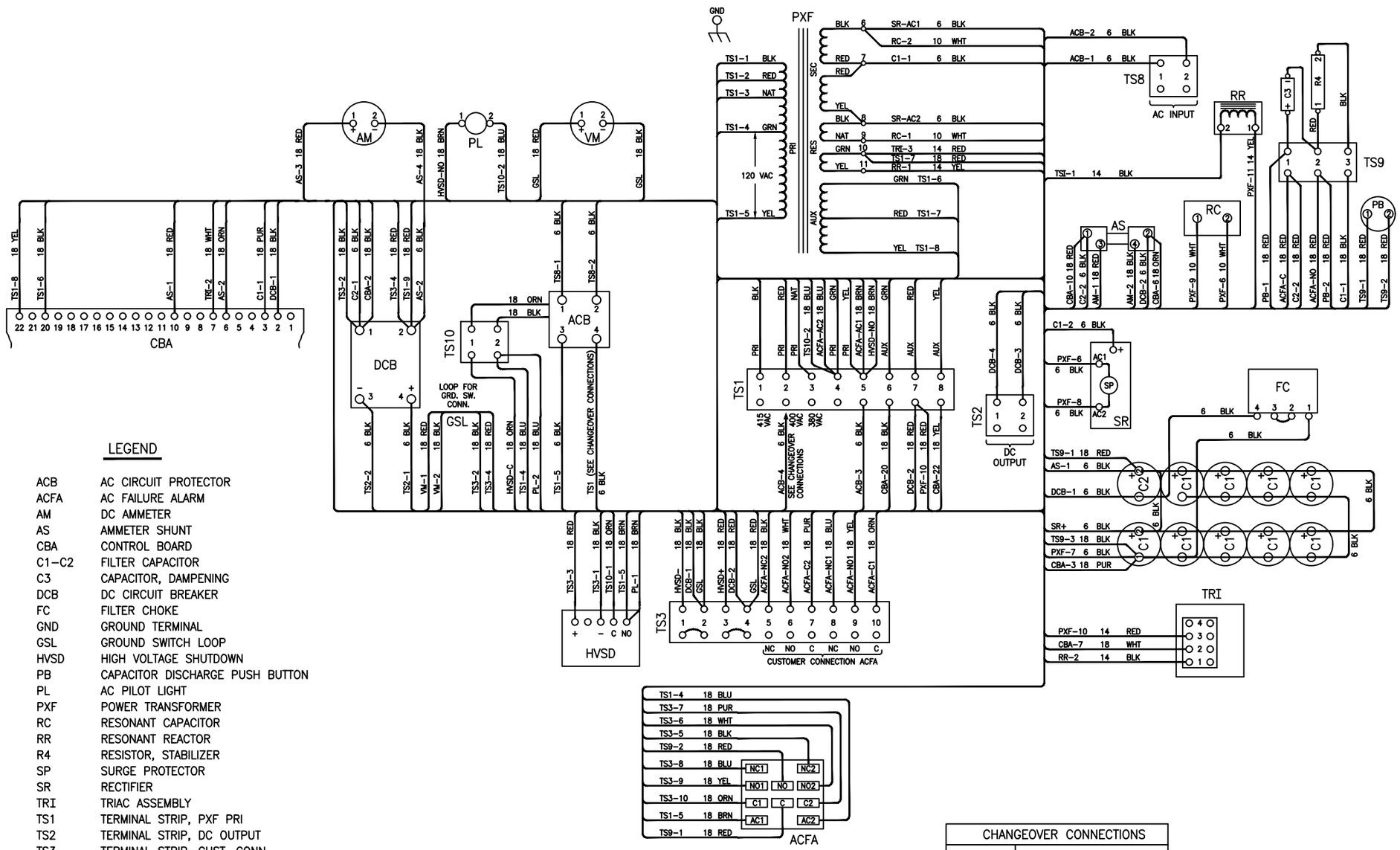

LEGEND

ACB	AC CIRCUIT PROTECTOR
ACFA	AC FAILURE ALARM
AM	DC AMMETER
AS	AMMETER SHUNT
CBA	CONTROL BOARD
C1–C2	FILTER CAPACITOR
C3	CAPACITOR, DAMPENING
DCB	DC CIRCUIT BREAKER
FC	FILTER CHOKE
GND	GROUND TERMINAL
GSL	GROUND SWITCH LOOP
HVSD	HIGH VOLTAGE SHUTDOWN
PB	CAPACITOR DISCHARGE PUSH BUTTON
PL	AC PILOT LIGHT
PXF	POWER TRANSFORMER
RC	RESONANT CAPACITOR
RR	RESONANT REACTOR
R4	RESISTOR, STABILIZER
SP	SURGE PROTECTOR
SR	RECTIFIER
TRI	TRIAC ASSEMBLY
TS1	TERMINAL STRIP, PXF PRI
TS2	TERMINAL STRIP, DC OUTPUT
TS3	TERMINAL STRIP, CUST. CONN.
TS8	TERMINAL STRIP, AC INPUT
TS9	TERMINAL STRIP, BALLAST
TS10	TERMINAL STRIP ACB
VM	DC VOLTMETER

CHANGEOVER CONNECTIONS	
380 VAC	ACB–4 TO TS1–3
400 VAC	ACB–4 TO TS1–2
415 VAC	ACB–4 TO TS1–1

ISSUES

ISSUE #	DESCRIPTION	ISS. BY ISS. DATE
2	SEE PCO# 44445	WD 6/22/17

UNLESS OTHERWISE SPECIFIED DIMENSIONS ARE IN INCHES ± TOLERANCES ON:		APPROVALS	DATE
HOLES	+0.004 −0.002	DRAWN KEL	10/8/99
FRACTIONS	±1/32	CHECKED DBW	10/8/99
DECIMALS (XX)	±0.020	APPROVED MCM	10/8/99
DECIMALS (XXX)	±0.010	APPROVED	
ANGLES	±1/2°		

SQUARE CORNERS AND ANGLES ARE 90° UNLESS OTHERWISE SPECIFIED.

WORKMANSHIP:
PER SPEC ENG032

MATERIAL:

FINISH:

PROPRIETARY INFORMATION
NOT TO BE COPIED, USED, TRANSMITTED, OR DISCLOSED WITHOUT PRIOR WRITTEN PERMISSION FROM UNIPOWER, LLC.

UNIPOWER
POWERING TECHNOLOGY

CONNECTION DIAGRAM 380/400/415 VAC, 50Hz ARE CHARGER, 36" CABINET

SIZE	DOC TYPE / NUMBER	ISSUE
B	KBC05800	2

SCALE:	SHEET:	FILE NAME:
N/A	1 OF 1	KBC5800_ISS_2